REEDSPORT OPT WAVE PARK
FERC PROJECT NO. 12713

APPLICATION FOR A MAJOR LICENSE

VOLUME I OF IV

REEDSPORT OPT WAVE PARK, LLC
An Oregon Corporation

JANUARY 2010

REEDSPORT OPT WAVE PARK
FERC PROJECT NO. 12713

APPLICATION FOR A MAJOR LICENSE

VOLUME I OF IV

TABLE OF CONTENTS

REEDSPORT OPT WAVE PARK
FERC PROJECT NO. 12713

APPLICATION FOR A MAJOR LICENSE

VOLUME I OF IV

LIST OF FIGURES

REEDSPORT OPT WAVE PARK
FERC PROJECT NO. 12713

APPLICATION FOR A MAJOR LICENSE

VOLUME I OF IV

LIST OF TABLES

Executive Summary

Reedsport OPT Wave Park, LLC (OPT) proposes to construct and operate the Reedsport OPT Wave Park (Reedsport Project), FERC Project No. 12713 off of the coast of Oregon. The proposed action is FERC's issuance of a 35-year license for installation of nine PB150 PowerBuoy® Wave Energy Converters (WECs), for a total of 10 PowerBuoy units with individual capacities of 150 kilowatts (kW) and a maximum output of 1.5 megawatts (MW), expected to generate up to 4,140 megawatt-hours (MWh) annually. The PowerBuoy WECs transform the kinetic energy of ocean swells into clean, renewable electricity. The 10-PowerBuoy wave park represents Phase II of OPT's proposed three-phased development approach, with information from the prior phase used to shape OPT's development of subsequent phases[1].

The Reedsport Project supports the initiatives of the state of Oregon to become a national leader in wave energy and encourage the generation of renewable energy as well as the national effort to reduce our dependence on fossil fuels. In recognition, the Reedsport Project was designated by Oregon Governor Ted Kulongoski as an Oregon Solutions project to enhance stakeholder involvement and the state and federal regulatory process. OPT, with stakeholder support, designed and implemented a consultation process where resource issues were identified early and approaches to address issues collectively developed. The key issues with regards to the Reedsport Project identified by stakeholders were driven primarily by the relative newness of the technology and the uncertainty of effects to resources. OPT and stakeholders worked closely together to develop a process that would allow for the implementation and operation of the wave park and at the same time reduce uncertainty by future monitoring and collection of information to address these issues.

The result of this collaborative effort has been reflected in the preparation of this License Application to the Federal Energy Regulatory Commission (FERC or Commission) as well as the development of a Settlement Agreement. OPT, in consultation with stakeholders, is finalizing the Settlement Agreement and its attachments. OPT anticipates completing these

[1] Phase I is a single PowerBuoy, which OPT will deploy prior to the installation of the array. The single PowerBuoy will not be connected to the electrical grid, and thus does not require a FERC license.

discussions with stakeholders in the near future and expects to file the Settlement Agreement with the Commission within four to six weeks of the filing of this Application. The Settlement Agreement brings forth the collaborative spirit which OPT and stakeholders have agreed to participate in and an adaptive management process designed to manage construction and operation of the Reedsport Project. The primary purpose of adaptive management is to manage development and operation of the project in an adaptive manner to avoid or minimize adverse effects. The reason for this adaptive management process is to provide the ability to adjust management and monitoring of the project in light of new relevant data. OPT and stakeholders propose that the FERC license be consistent with the Settlement Agreement.

The Reedsport Project consists of both marine and terrestrial components. The marine portion of the project will be located in the Pacific Ocean approximately 2.5 nautical miles off the coast of Douglas County, Oregon. The project boundary will encompass an area of 0.25 square miles (800 by 800 meters) where the water depth is approximately 165 to 225 feet (50 to 69 meters). The land-based portion of the project will occur entirely in the unincorporated town of Gardiner, and a portion of the underground transmission cable will be located within an existing easement that traverses the Oregon Dunes National Recreation Area, which is administered by Siuslaw National Forest.

Each PowerBuoy will be moored with three anchor lines arranged symmetrically around each PowerBuoy and attached to steel-reinforced concrete anchors that will partially settle into the seabed. The mooring system is based on proven engineering techniques that are commonly utilized in other commercial marine applications for designing the mooring systems of floating platforms. The generated power will be transmitted to shore first via an armored subsea transmission cable, which will be trenched in the seabed to a depth of 3 to 6 feet until it enters the underwater outlet of an existing, underutilized 30-inch wastewater discharge pipe located about a half mile from shore. Once ashore, the subsea transmission cable will continue within the effluent pipe for approximately 3 miles and then connect to the existing Douglas Electric Cooperative transmission line.

OPT initiated informal consultation regarding the Reedsport Project with regulatory agencies and key stakeholders in July 2006. In July 2007, OPT filed a Pre-Application Document (PAD) and Notice of Intent to file a license application, along with a request to use the Traditional Licensing Process (TLP), with the Commission and distributed these documents to regulatory agencies and interested stakeholders. A draft license application, including a Preliminary Draft Environmental Assessment (PDEA), was distributed to stakeholders for their review and comment on July 8, 2008. Stakeholders were asked to notify OPT of any comments within 90 days. Comments of stakeholders on the draft license application and PDEA were as follows:

Stakeholder	Date
National Marine Fisheries Service	September 5, 2008 (written).
U.S. Fish and Wildlife Service	PDEA, September 8, 2008 (written); avian study plan, September 20, 2008 (written).
Oregon Dept. of Fish and Wildlife	PDEA - September 4, 2008 (written); Study Plans - September 4, 2008 (written).
Oregon Dept. of Land Conservation and Development	August 21, 2008 (phone).
Oregon Parks and Recreation Dept.	August 27, 2008 (phone); August 28, 2008 (written); August 29, 2008 (written); September 15, 2008 (written).
Oregon Dept. of Environmental Quality	August 28, 2008 (phone, written).
Oregon Water Resources Dept.	August 13, 2008 (written); August 21, 2008 (phone).
Surfrider	September 2, 2008 (written).
Southern Oregon Ocean Resources Coalition	September 12, 2008 (written).

OPT evaluated all comments received in preparing the Exhibit E, which has been prepared in the form of an Applicant-Prepared Environmental Assessment (APEA [Volume II of this application]). Refer to Volume III of IV for OPT's responses to the comments received on the draft license application documents. Other consultation activities to date, along with the environmental effects of constructing and operating the project are discussed in the APEA.

Installation of the Reedsport Project requires designation of a No Fishing and Navigation Exclusion Zone in the PowerBuoy array for human safety and project protection. OPT will continue to consult with the U.S. Coast Guard (USCG), the state of Oregon, commercial fishermen, and other appropriate agencies and entities to refine the design and implementation of the exclusion zone.

OPT proposes to construct and operate the project as described above and to implement the following environmental protection, mitigation, and enhancement (PM&E) measures within the terms agreed to in the Settlement Agreement and adaptive management process[2].

- Implement Spill Prevention Control and Countermeasure (SPCC) Plan.
- Equip PowerBuoys with devices or materials to prevent pinniped haul-out.
- Conduct Cetacean Study.
- Conduct Pinniped Study.
- Conduct Fish and Invertebrates Study.
- Conduct Electromagnetic Field Study.
- Conduct Offshore Avian Use Study.
- Conduct Wave, Current, and Transport Study.
- Implement Emergency Response and Recovery Plan.
- Implement Crabbing and Fishing Protection Plan.
- Implement Marine Use/Public Information Plan.
- Light PowerBuoys in accordance with U.S. Coast Guard (USCG) regulations and in consideration of protection for seabirds and recreational and commercial fishing vessels.
- Install transmission line through existing effluent discharge pipe to eliminate effects of crossing nearshore, intertidal, and dune habitat.
- Bury subsea transmission cable to minimize hazards to navigation and fishing.
- Install the terrestrial portion of transmission cable underground within the existing effluent pipe easement to minimize potential visual, cultural, and environmental effects.
- Locate subsurface floats at depth of 30 to 50 feet to avoid potential vessel strike.
- Conduct a Visual Assessment Review of beach and Umpqua lighthouse following installation of first PowerBuoy.
- Implement an Interpretive and Education Plan (including design and installation of interpretive displays on shore).

[2] OPT, in consultation with stakeholders, is finalizing the Settlement Agreement and its attachments. OPT anticipates completing these discussions with stakeholders in the near future and expects to file the Settlement Agreement with the Commission within four to six weeks of the filing of this Application.

OPT is seeking a 35-year license and this Application for a Major (less than 5 MW) License. The Application is compiled in three volumes that contain each of the exhibits required by Title 18 of Code of Federal Regulations (C.F.R.), Subchapter B, Part 4 (Paragraphs 4.38 and 4.61), and a forth volume containing the Settlement Agreement Appendices and Exhibits, supporting appendices, and study plans. The organization of the exhibits is described below.

- Volume I — Executive Summary
  - Initial Statement
  - 4.32 Requirements
  - Exhibit A
  - Exhibit F
  - Exhibit G
- Volume II — Applicant Prepared Environmental Assessment (Exhibit E)
- Volume III — Consultation Material
- Volume IV — Settlement Agreement Appendices and Exhibits

This License Application provides a compilation of information gathered through this licensing process. It also contains the detailed justification of OPT's proposal for the Reedsport Project, a project that promotes the generation of renewable power with consideration to natural resources and other users of the resource.

Initial Statement

18 CFR §4.61(b)(1) Reedsport OPT Wave Park, LLC (OPT) ***applies to the Federal Energy Regulatory Commission for*** a license ***for the*** Reedsport OPT Wave Park (Reedsport Project), FERC Project No. 12713 ***as described hereinafter***.

18 CFR §4.61(b)(2) The location of the project is:

State or territory:	Oregon
County:	Douglas
Township or nearby town:	Gardiner (unincorporated), Reedsport
Stream or other body of water:	Pacific Ocean

18 CFR §4.61(b)(3) The exact name, address, and telephone number of the applicant is:

Reedsport OPT Wave Park, LLC
1590 Reed Road
Pennington, NJ 08534
Telephone: (609) 730-0400

18 CFR §4.61(b)(4) The exact name, address, and telephone number of each person authorized to act as agent for the applicant in this application, if applicable, are:

Charles F. Dunleavy
Reedsport OPT Wave Park, LLC
1590 Reed Road
Pennington, NJ 08534
Telephone: (609) 730-0400
FAX: (609) 730-0404
e-mail: cdunleavy@oceanpowertech.com

Dr. George W. Taylor
Reedsport OPT Wave Park, LLC
1590 Reed Road
Pennington, NJ 08534
Telephone: (609) 730-0400
FAX: (609) 730-0404
e-mail: gtaylor@oceanpowertech.com

Philip Pellegrino
Oregon Wave Energy Partners I, LLC
1590 Reed Road
Pennington, NJ 08534
Telephone: (609) 730-0400
FAX: (609) 730-0404
e-mail: ppellegrino@oceanpowertech.com

18 CFR §4.61(b)(5) The applicant is a domestic corporation ***and*** is not ***claiming preference under section 7(a) of the Federal Power Act. See 16 U.S.C. 796.***

18 CFR §4.61(b)(6)(i) The statutory or regulatory requirements of the state(s) in which the project would be located that affect the project as proposed with respect to bed and banks and the appropriation, diversion, and use of water for power purposes, and with respect to the right to engage in the business of developing, transmitting, and distributing power and in any other business necessary to accomplish the purposes of the license under the Federal Power Act, are:

The regulatory requirements of the state including the review process and authorizations are outline in Table IS-1.

TABLE IS-1
OREGON PERMITTING REQUIREMENTS

Permit, Certification, or Approval	Statute or Regulation	Grantor/Reviewer
State Hydroelectric License	Oregon Revised Statute 543-Hydroelectric Projects (ORS 543)	Water Resources Department
Ocean Energy Facility License for Commercial Operation	Oregon Administrative Rules (OAR) 141-125	Department of State Lands
Ocean Shores Permit	OAR 736-020	Parks and Recreation Department
Dredge and Fill Section 401 Water Quality Certification	Clean Water Act Section 401 (33 U.S.C. 1341) and OAR 340-048	Department of Environmental Quality
Joint Permit Application ("Fill-Removal Permit")	OAR 141-85	Department of State Lands
Coastal Zone Certification	Coastal Zone Management Act	Department of Land Conservation and Development

18 CFR §4.61(b)(6)(ii) The steps which the applicant has taken or plans to take to comply with each of the laws cited above are:

OPT has taken a number of steps to comply with the required non-FERC permits and use authorizations and is in the process of consulting with those agencies that have jurisdiction for the identified permits, certifications, and approvals. In December 2009, OPT filed with the state of Oregon the Joint Permit Application (Fill-Removal Permit). OPT plans to file the remaining applications at the appropriate time.

18 CFR §4.61(b)(7) Brief project description

The project involves the construction and operation of a wave energy project approximately 2.5 nautical miles off the coast of Gardiner in Douglas County, Oregon (Figure IS-1). The proposed action is FERC's issuance of a 35-year license for installation of nine PB150 PowerBuoy® WECs, for a total of 10 PowerBuoy units with individual capacities of 150 kW and a maximum output of 1.5 MW, expected to generate up to 4,140 MWh annually. The PowerBuoy WECs transform the kinetic energy of ocean swells into clean, renewable electricity. The 10-PowerBuoy wave park represents Phase II of OPT's proposed three-phased development approach, with information from the prior phase used to shape OPT's development of subsequent phases[3].

In addition to the PowerBuoy WECs, the marine-based structures in the project include associated moorings, an Underwater Substation Pod (USP), and a subsea transmission cable. Land-based structures include an underground transmission cable, underground vault, and a shore station.

[3] Phase I is a single PowerBuoy, which OPT will deploy prior to the installation of the array. The single PowerBuoy will not be connected to the electrical grid, and thus does not require a FERC license.

FIGURE IS-1
PROJECT LOCATION MAP

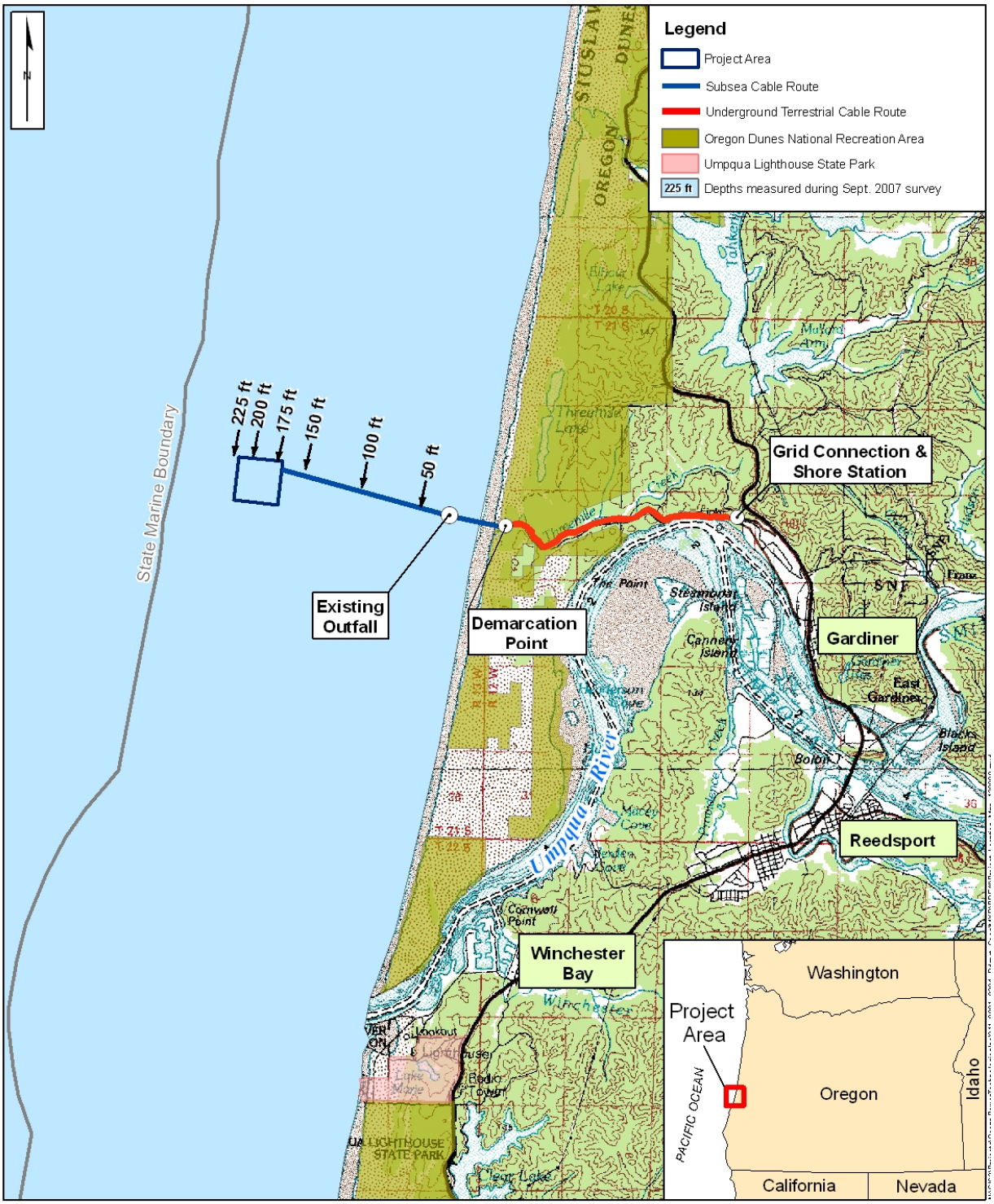

Miles
1 0.5 0 1 2
Coordinate system: UTM Zone 10 N WGS1984.
Date: 12/09/2009

Base Map Source: USGS 100K Topo Quadrangle

REEDSPORT OPT WAVE PARK

The marine portion of the project is proposed to be located within state waters. The project boundary of the PowerBuoy array area will encompass an area of 0.25 square miles (800 by 800 meters) where the water depth is approximately 165 to 225 feet (50 to 69 meters). However, the actual footprint of the constructed array is expected to be only about 1,000 feet by 1,300 feet (300 meters by 400 meters) or approximately 30 acres (0.12 km^2) and will be deployed in the northwest corner of the project area, where depths range from approximately 204 to 225 feet (62 to 69 meters). The subsea transmission cable will be connected to the array and will follow an easterly course about 2.3 statute miles to the outlet of an existing effluent discharge pipe that is approximately 0.5 statute miles from shore.

The land-based portion of the project, occurring entirely in the unincorporated town of Gardiner, includes underground and aboveground components. The terrestrial transmission cable, which terminates at an existing Douglas Electric Cooperative transmission line, represents a total distance of approximately 3 miles. All of the terrestrial transmission cable will be underground and will continue within the existing effluent pipe, and will include an aboveground shore station, a small (100- to 200-square-foot) building located approximately 3 miles inland and in close proximity to the Douglas Electric Cooperative interconnection.

(i) Proposed installed generating capacity 1.5 ***MW***.

(ii) Check appropriate box:

___ ***existing dam***
___ ***unconstructed dam***
___ ***existing dam, major modified project (see Sec. 4.40(b)(14))***

Not applicable. The wave energy project is a hydrokinetic project using OPT's PB150 PowerBuoy wave energy technology and will be installed in the Pacific Ocean. The project does not include a dam or other ancillary structures associated with a traditional hydroelectric project.

18 CFR §4.61(b)(8) Lands of the United States affected (shown on Exhibit G):

	(Name)	***(Acres)***
(i) National Forest	Siuslaw National Forest[4]	5
(ii) Indian Reservation		
(iii) Public Lands Under Jurisdiction of		
(iv) Other		
(v) Total U.S. Lands		
(vi) Check appropriate box:	_X_ ***Surveyed land***	
	__ ***Unsurveyed land***	

18 CFR §4.61(b)(9) Construction of the project is planned to start within 12 ***months, and is planned to be completed within*** 36 ***months, from the date of issuance of license.***

[4] The linear distance of transmission cable crossing the Oregon Dunes National Recreation Area (administered by Siuslaw National Forest) is approximately 4,332 feet or 0.82 miles. Underground cable right-of-way is 50 feet.

Section 4.32

18 CFR §4.32 REQUIREMENTS

18 CFR §4.32 Acceptance for filing or rejection; information to be made available to the public; requests for additional studies.

18 CFR §4.32(a) Each application must:

18 CFR §4.32(a)(1) For a preliminary permit or a license, identify every person, citizen, association of citizens, domestic corporation, municipality, or state that has or intends to obtain and will maintain any proprietary right necessary to construct, operate, or maintain the project;

Reedsport OPT Wave Park, LLC is the only applicant for the FERC license and will be the sole entity that has and will maintain proprietary rights to construct, operate, and maintain the project.

18 CFR §4.32(a)(2) For a preliminary permit or a license, identify (providing names and mailing addresses):

18 CFR §4.32(a)(2)(i) Every county in which any part of the project, and any federal facilities that would be used by the project, would be located;

Douglas County
1036 S.E. Douglas Street
Roseburg, Oregon 97470
Commissioners: Doug Robertson, Joe Laurance, and Susan Morgan

18 CFR §4.32(a)(2)(ii) Every city, town, or similar local political subdivision:

18 CFR §4.32(a)(2)(ii)(A) In which any part of the project, and any federal facilities that would be used by the project, would be located; or

Gardiner (unincorporated town; government administered by Douglas County - see above).

The proposed project's subsea transmission cable will make landfall at the Oregon Dunes National Recreation Area, utilizing an existing easement and passing within an existing effluent discharge pipe located under the sand dunes. The Oregon Dunes National Recreation Area is part of the Siuslaw National Forest, administered by the National Forest Service, which is part of the U.S. Department of Agriculture. Otherwise, no federal facilities would be used by or otherwise associated with the proposed project, and no special purpose political subdivisions exist within the proposed project boundary.

18 CFR §4.32(a)(2)(ii)(B) That has a population of 5,000 or more people and is located within 15 miles of the project dam;

There is no project dam.

Also there are no cities and towns with a population of 5,000 or more that lie within 15 miles of the proposed project. The U.S. Census 2006 population estimate for Reedsport is 4,355.

18 CFR §4.32(a)(2)(iii) Every irrigation district, drainage district, or similar special purpose political subdivision:

18 CFR §4.32(a)(2)(iii)(A) In which any part of the project, and any federal facilities that would be used by the project, would be located; or

Not applicable

18 CFR §4.32(a)(2)(iii)(B) That owns, operates, maintains, or uses any project facilities or any federal facilities that would be used by the project;

Not applicable

18 CFR §4.32(a)(2)(iv) Every other political subdivision in the general area of the project that there is reason to believe would likely be interested in, or affected by, the application; and

Not applicable

18 CFR §4.32(a)(2)(v) All Indian tribes that may be affected by the project.

Warren Brainard, Chief, Tribal Council and
Howard Crombie, Director, Department of Natural Resources
Confederated Tribes of Coos, Lower Umpqua and Siuslaw Indians
455 S. 4th Street
Coos Bay, OR 97420-1570

18 CFR §4.32(a)(3)(i) For a license (other than a license under section 15 of the Federal Power Act), state that the applicant has made, either at the time of or before filing the application, a good faith effort to give notification by certified mail of the filing of the application to:

Reedsport OPT Wave Park, LLC is filing for an original license and has notified the necessary parties by certified mail in accordance with this requirement.

18 CFR §4.32(a)(3)(i)(A) Every property owner of record of any interest in the property within the bounds of the project, or in the case of the project without a specific boundary, each such owner of property which would underlie or be adjacent to any project works including any impoundments; and

Reedsport OPT Wave Park, LLC will notify by certified mail of the filing of the application to the following property owners which own land over which the project occurs:

International Paper
Global Headquarters
6400 Poplar Avenue
Memphis, TN 38197

Siuslaw National Forest
4077 S.W. Research Way
P.O. Box 1148
Corvallis, OR 97339

Douglas County Planning Department
Douglas County Courthouse
Justice Building, Room 106
Roseburg, OR 97470

Port Blakley Tree Farms
P.O. Box 800
Molalla, OR 97038

Roseburg Resources
10599 Old Highway 99
Dillard, OR 97432

Oregon Department of State Lands
775 Summer Street NE, Suite 100
Salem, OR 97301-1279

18 CFR §4.32(a)(3)(i)(B) The entities identified in paragraph (a)(2) of this section, as well as any other federal, state, municipal or other local government agencies that there is reason to believe would likely be interested in or affected by such application.

Reedsport OPT Wave Park, LLC is notifying all parties identified on the distribution list included in Section 12 of the APEA.

18 CFR §4.32(a)(3)(ii) Such notification must contain the name, business address, and telephone number of the applicant and a copy of the Exhibit G contained in the application, and must state that a license application is being filed with the Commission.

The notification referred to above included the required information.

18 CFR §4.32(a)(4)(i) As to any facts alleged in the application or other materials filed, be subscribed and verified under oath in the form set forth in paragraph (a)(3)(ii) of this section by the person filing, an officer thereof, or other person having knowledge of the matters set forth. If the subscription and verification is by anyone other than the person filing or an officer thereof, it shall include a statement of the reasons therefore.

18 CFR §4.32(a)(4)(ii) This application for a license for a major water power project 5 megawatts or less, etc.) is executed in the state of New Jersey, County of Mercer.

By: _____

George W. Taylor, Reedsport OPT Wave Park, LLC, 1590 Reed Road, Pennington, New Jersey 08534, being duly sworn, deposes and says that the contents of this application are true to the best of his knowledge or belief. The undersigned applicant has signed the application this 29th day of January, 2010.

By: _____

Subscribed and sworn to before me, a [Notary Public, or title of other official authorized by the state to notarize documents, as appropriate] of the State of New Jersey this day 29th of January, 2010.

/SEAL/ [if any]

(Notary Public, or other authorized official) Mary P. Mikula

MARY P. MIKULA
NOTARY PUBLIC OF NEW JERSEY
Commission Expires 5/3/2010

Exhibit A
Project Description

18 CFR §4.61(c) Exhibit A is a description of the project and the proposed mode of operation.

18 CFR §4.61(c)(1) The exhibit must include, in tabular form if possible, as appropriate:

18 CFR §4.61(c)(1)(i) The number of generating units,

Ten PB150 PowerBuoy units.

including auxiliary units,

One Underwater Substation Pod.

the capacity of each unit, and

150 kW per unit, with a maximum of 1.5 MW total project capacity.

provisions, if any, for future units;

The project's FERC boundary has the potential of producing 50 MW or more of electric power. OPT anticipates filing a license amendment at some point in the future to expand the project to 100 PowerBuoys having a combined capacity of 50 MW or more. OPT anticipates deploying the PowerBuoys in an array of three rows, approximately in a SW-NE orientation. OPT anticipates that the 50 MW array will be approximately 5 miles long (8,000 meters) by 984 feet wide (300 meters) and consist of four array clusters separated by three transit lanes. The full build out would be placed within the larger rectangular area indicated in Figure A-1. This total area would be approximately 0.93 square miles (2.4 square km). The addition of PowerBuoys beyond the licensed 10 PowerBuoys would require OPT to prepare and file an application for a capacity amendment to the FERC license. The amendment would require the same federal and state permits and authorizations identified for the 10 PowerBuoys.

FIGURE A-1
POTENTIAL FULL BUILD-OUT AREA

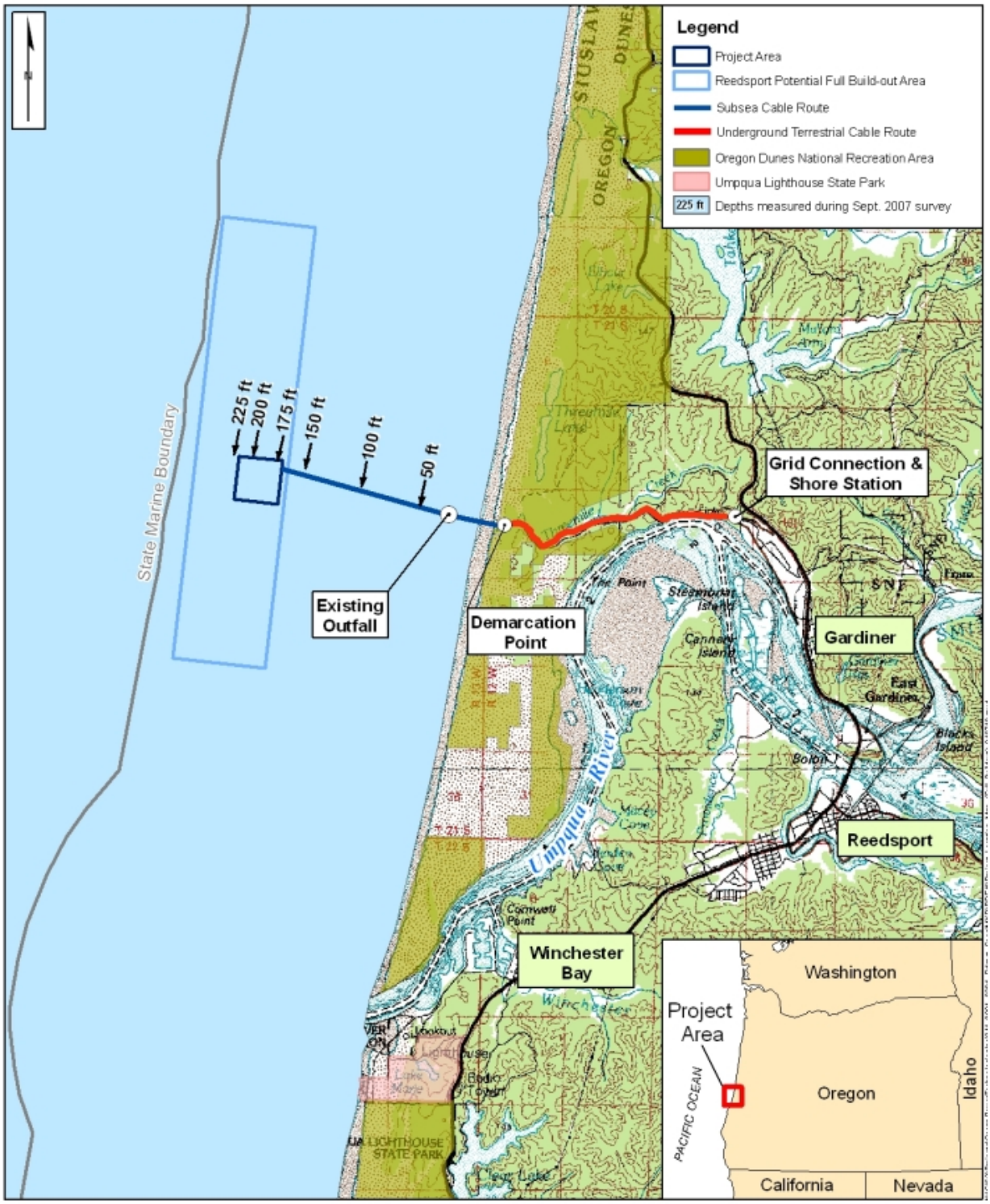

Miles
1 0.5 0 1 2
Coordinate system: UTM Zone 10 N WGS1984.
Date: 1/07/2010

Base Map Source: USGS 100K Topo Quadrangle

REEDSPORT OPT WAVE PARK

18 CFR §4.61(c)(1)(ii) The type of hydraulic turbine(s);

The Reedsport Project will utilize OPT, Inc.'s PB150 PowerBuoy WEC devices (Figure A-2) to transform the kinetic energy of ocean swells into clean, renewable electricity. The PowerBuoy is designed of simple yet rugged steel construction to generate electricity from the rising and falling of ocean waves.

TABLE A-1
SPECIFICATION OF PROJECT COMPONENTS

WEC Type:	PowerBuoy
Number of PowerBuoys:	10
Rated Capacity:	150 kW per PowerBuoy, maximum of 1.5 MW total
Grid Connection:	BPA Gardiner Substation via Douglas Electric Cooperative transmission line
Water Depth:	165 to 225 feet (50 to 69 meters)
Footprint (max):	0.25 sq mile (800 meters x 800 meters)
Configuration:	1 rows of 3, 1 row of 4, and 1 row of 3 PowerBuoys
Distance from Coast:	2.5 miles (4 kilometers)
Float Diameter:	36 feet (11-meters)
Float Height:	9.8 feet (3 meters)
Height Above Water:	29.5 feet (9 meters)
Draft:	115 feet (35 meters)
Displacement	300 tons (272 metric tons)
Underwater Substation Pod:	6 feet diameter (1.9 m), 15 feet long (4.6 m)
Number of Anchors:	16 total
Anchor Type:	Mass, steel-reinforced, pre-cured concrete
Anchor Mass:	320 tons (290 metric tons)
Anchor Dimensions:	Approximately 32.8 feet in diameter and 24.6 feet high (770 cubic yards; 10 meters in diameter x 7.5 meters high)

The Reedsport Project will involve deployment and operation of 10 PowerBuoys having a total capacity of 1.5 MW. Specifications of the project are presented in Table A-1 and are further described below. A schematic of the PowerBuoy is shown in Figure A-2 (A) and (B), and plan and profile views of the PowerBuoy array are shown in Figures A-3 and A-4.

FIGURE A-2 (A) AND (B)
OCEAN POWER TECHNOLOGIES, INC.
PB150 POWERBUOY WAVE ENERGY CONVERTER

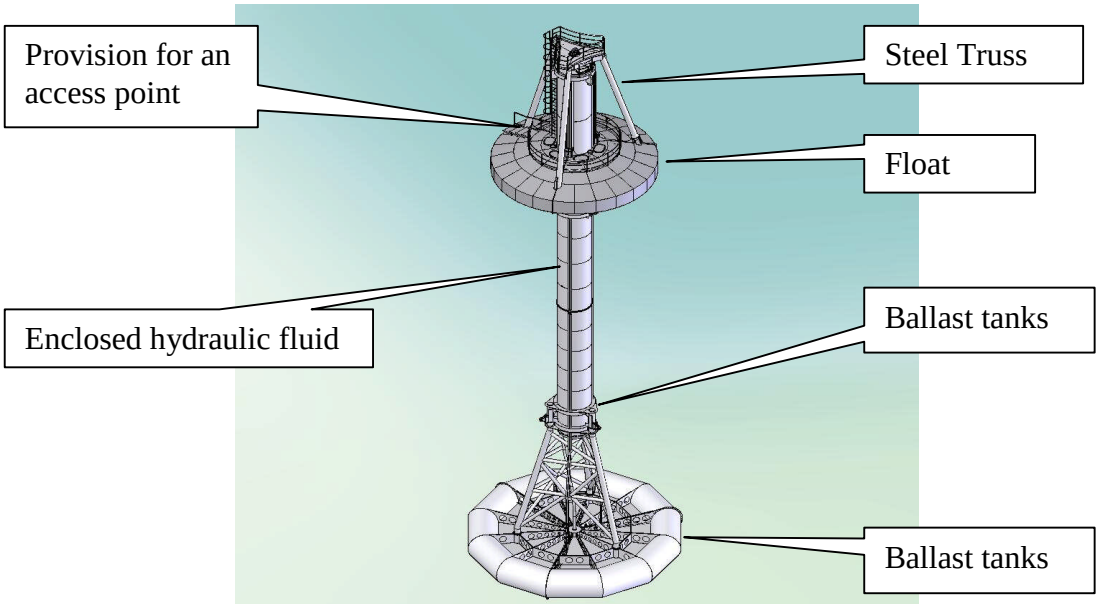

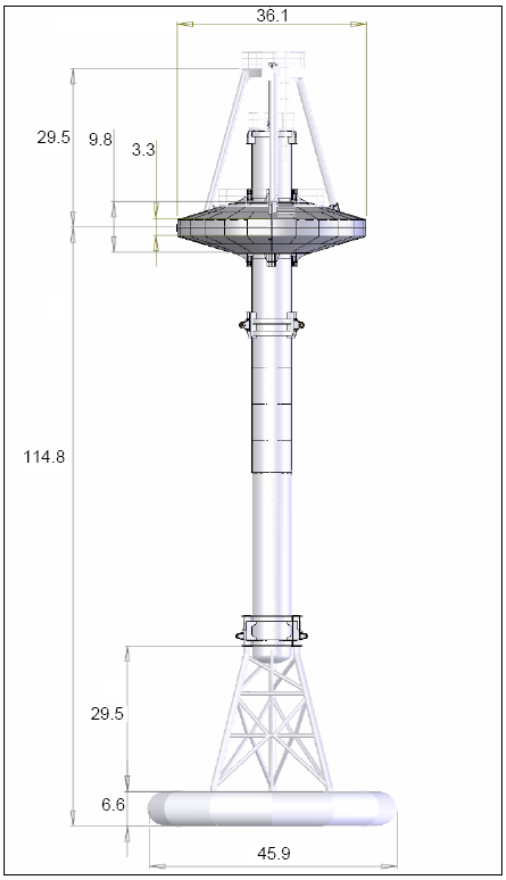

PB150 PowerBuoy
(Dimensions in feet.)

FIGURE A-3
PROPOSED POWERBUOY DEPLOYMENT ARRAY (PLAN VIEW)

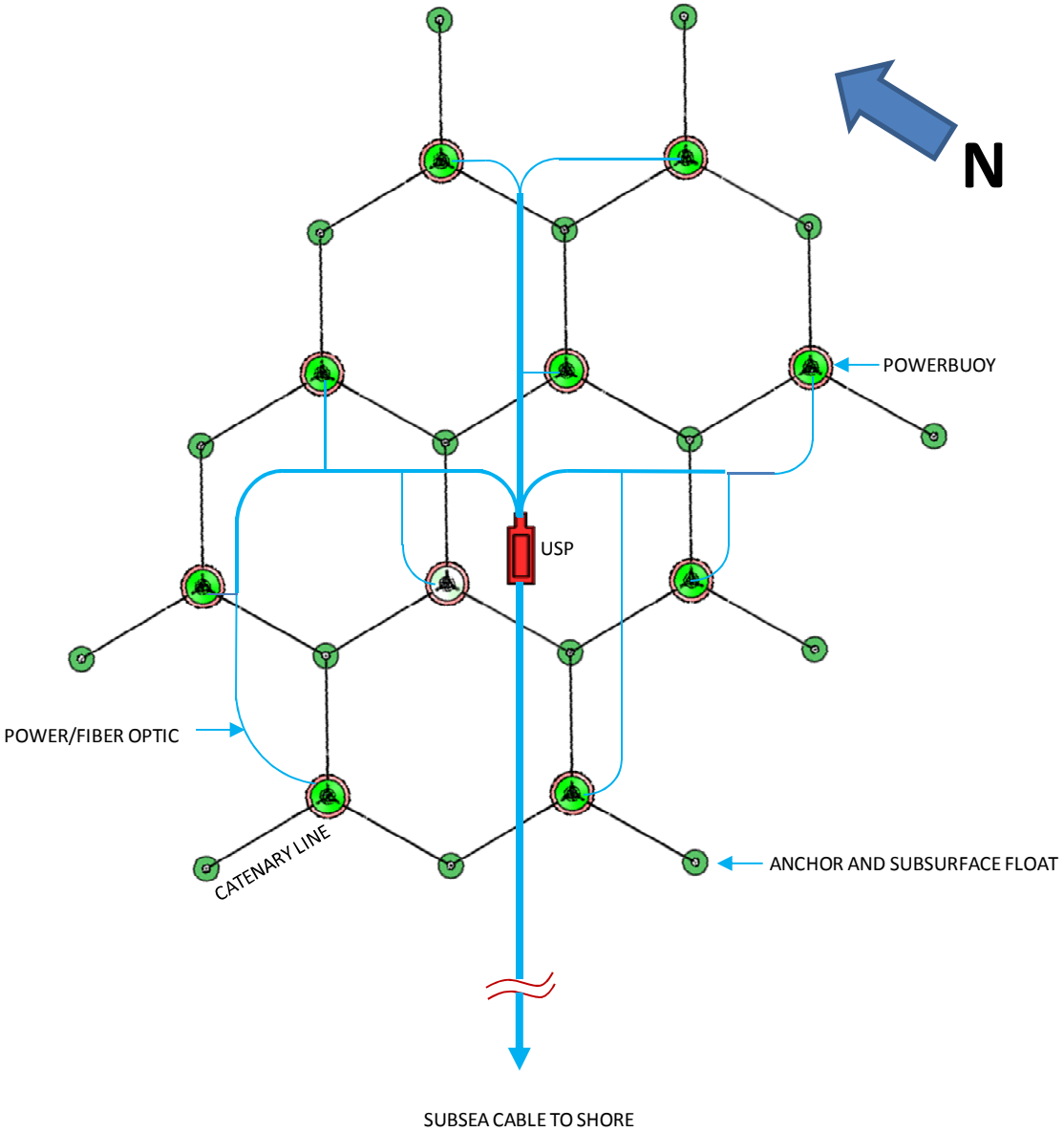

Note: Anchors appear below subsurface floats in top view of array.

FIGURE A-4
PROFILE VIEW OF POWERBUOY ARRAY FROM SOUTHERLY DIRECTION

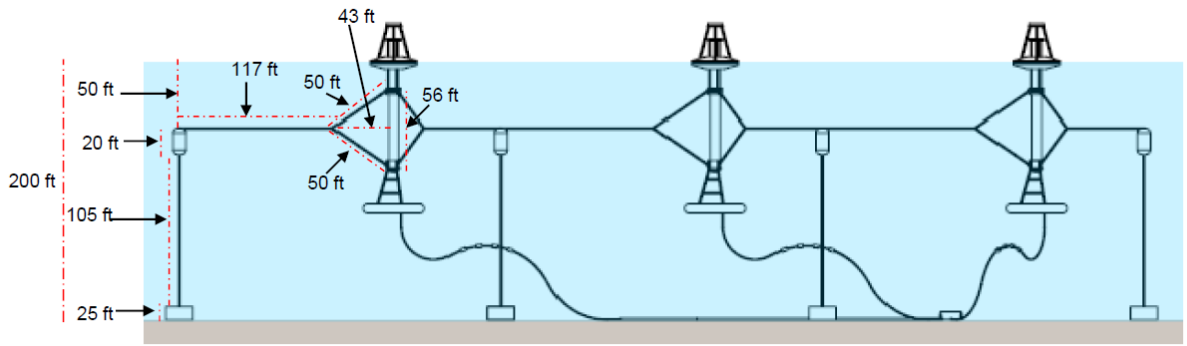

Middle PowerBuoy is located forward of side PowerBuoys. USP shown below PowerBuoy on right. Note: Dimensions in feet. Assumed depth is 200 feet (61 meters). Dimensions are subject to change with design loads (will vary depending on depth and position within array) and final project design.

Each PowerBuoy has a diameter of 36 feet (the float), extends 29.5 feet above water, and has a draft of 115 feet (Figure A-2). The 10 PowerBuoys will be deployed in an array of three rows, approximately in a SW-NE orientation. The two outside rows will consist of three PowerBuoys, and the middle row will consist of four PowerBuoys. The PowerBuoys will be located approximately 330 feet (100 meters) apart. OPT is looking to site the project within an area measuring ½-mile-by-½-mile (160 acres, 0.65 km^2); the approximate coordinates of the PowerBuoy array will be 43.75501°, -124.23521. The actual footprint of the constructed array is expected to be less than 1,000 feet by 1,300 feet (300 meters by 400 meters) or approximately 30 acres (0.12 km^2)[5].

A power/fiber optic cable will exit the bottom of each PowerBuoy, descending to the seabed in a lazy "S" shape with subsurface floats attached to the cable and a clump weight at the seabed. The football-shaped subsurface floats are two-piece and clamp onto the power cable at prescribed locations to give the necessary buoyancy to the cable to act as both a strain relief (for the heaving motion of the PowerBuoy) and to keep it off the bottom (prevents cable sweep at the seabed). The cable will provide the PowerBuoy with power transmission and communications.

[5] The project area for the PowerBuoy array (0.25 square miles) is larger than the eventual PowerBuoy array footprint (0.05 square miles [30 acres]) in order to allow OPT sufficient area to fine tune the deployment location, given on-site conditions experienced during deployment.

The PowerBuoy generates power by using the up-and-down motion of the surface waves and using it to cycle hydraulic cylinders. The hydraulic fluid is then pumped through a hydraulic motor which is made to spin. In this way, the reciprocating, linear motion is converted into rotational motion. In the PowerBuoy, the hydraulic motor is coupled to a generator which generates AC current that is smoothed into DC current, and then is converted back to 60 Hz synchronous three-phase power. This AC to DC to AC electrical conversion occurs in each PowerBuoy before exiting and being transmitted to the USP. The USP houses switching gear and a transformer, which is used to increase the voltage to the onshore transmission voltage level before the power is transmitted to shore (Figure A-5) by means of an armored submarine cable. The USP is about 6 feet in diameter and 15 feet in length. It rests on the seabed below the PowerBuoys and is held down with pre-cured concrete ballast blocks. The power produced by the PowerBuoys is routed into the USP through watertight penetrators. The 10 PowerBuoys will share the one USP.

FIGURE A-5
UNDERWATER SUBSTATION POD

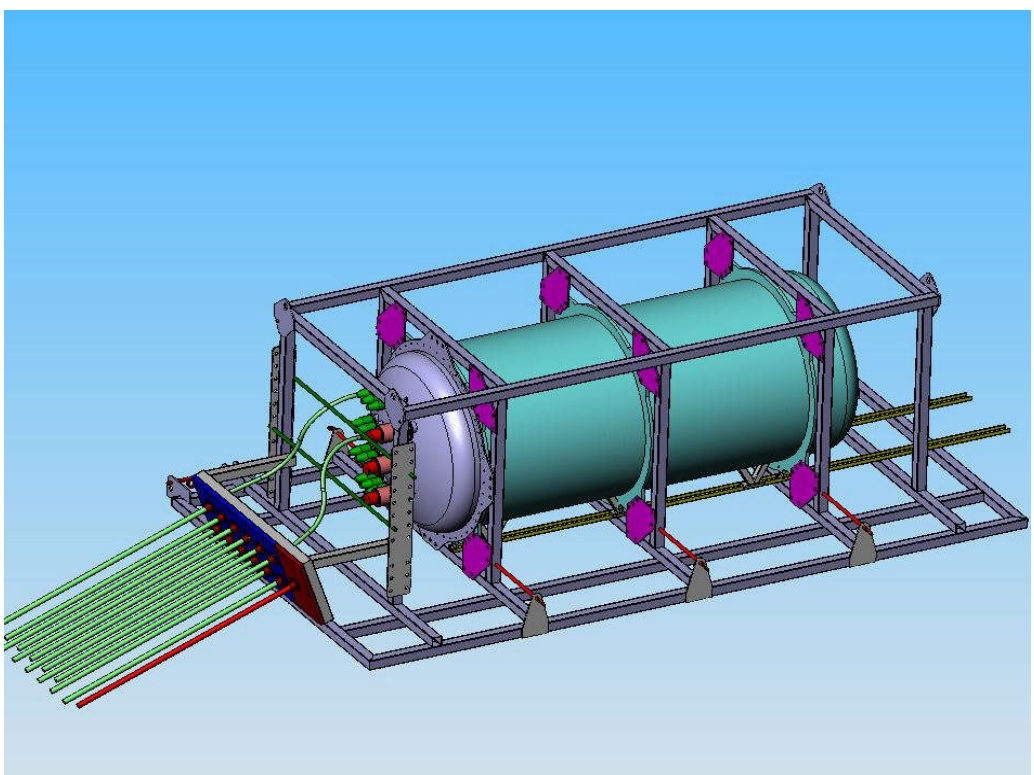

18 CFR §4.61(c)(1)(iii) A description of how the plant is to be operated, manual or automatic, and whether the plant is to be used for peaking;

Each Power Buoy will contain 198 to 264 gallons (750 to 1,000 L) of Shell Tellus Oils T hydraulic fluid. Sensors on the PowerBuoy continuously monitor the performance of the various subsystems and surrounding ocean environment. Data is available to the shore station or a remote-control station in real time. The control systems inherent to the PowerBuoy are used to monitor its position, to measure and regulate the flow of electricity. Also monitored are hydraulic pressures, temperatures, buoy and float position, and electric current and voltages. The controls are able to be monitored and operated remotely via radio/Internet link in real time. Alarms can be received and attended to remotely as well. In the event of storm conditions, the PowerBuoy automatically locks-up and ceases power production. When the wave heights return to normal, the PowerBuoy unlocks and recommences energy conversion and transmission of the electrical power ashore. The PowerBuoy has the ability to electronically "tune" its performance to maximize efficiency in changing wave conditions.

Routine project operations and controls will occur remotely from OPT, Inc.'s operations center. PowerBuoy instrumentation allows remote monitoring of project systems and functionality. This project will not be equipped with energy storage provisions for peaking power.

18 CFR §4.61(c)(1)(iv) The estimated average annual generation in kilowatt-hours or mechanical energy equivalent;

OPT anticipates that the 10 PowerBuoys will have a rated capacity of 1.5 MW. The estimated total annual energy output is up to 4,140 MWh. The estimated capacity factor is 35 percent, and the estimated availability is 90 percent—both comparable to a modern wind turbine sited in a class V wind site.

18 CFR §4.61(c)(1)(v) The estimated average head on the plant;

Not applicable.

18 CFR §4.61(c)(1)(vi) The reservoir surface area in acres and, if known, the net and gross storage capacity;

Not applicable.

18 CFR §4.61(c)(1)(vii) The estimated minimum and maximum hydraulic capacity of the plant (flow through the plant) in cubic feet per second and estimated average flow of the stream or water body at the plant or point of diversion; for projects with installed capacity of more than 1.5 megawatts, monthly flow duration curves and a description of the drainage area for the project site must be provided;

Not applicable, since there is no reservoir associated with the Reedsport Project. OPT anticipates a maximum project boundary of 0.25 square miles (800 meters by 800 meters). Water depths within this area range from 165 to 225 feet (50 to 69 meters).

Unlike a conventional hydroelectric project, for which discharge and head determine power and energy, for a wave power project like the Reedsport Project, the characteristics of the waves in a given location determine power and energy.

Waves are characterized by wave length (L), height (H), and period (T), or the time interval between consecutive wave crests at a stationary point. Because a typical ocean state consists of combination of waves with varying properties, an averaging process is needed to estimate the total power in each meter of wave. Significant wave height (approximately equal to the average of the highest one-third of the waves) is the most useful measurement for this purpose. Significant wave height and wave period can be measured from a wave rider buoy and used to calculate average total power (in kW per meter width of wave front) for a typical sea state. This data can also be transformed to generate a wave scatter diagram, which shows the frequency of occurrence of sea states (or particular combinations of significant wave height and peak wave time period) over intervals of time and contours of constant wave power (in kW/m).

The Reedsport Project site was studied, along with several other sites along the Oregon coast, by the Electric Power Research Institute (EPRI) in 2004. In a report about the Douglas County (i.e., Reedsport) site, EPRI identified the nearest wave data buoy to the project site (EPRI, 2004a). The Scripps Institution of Oceanography's Coquille River Station (Coastal Data Information Program [CDIP] 0037) data buoy is located at a depth of 210 feet (64 m) about 70 miles southwest of the project site. Measurements were collected from this buoy from 1985 to 1996. The maximum significant wave height recorded at this buoy during this period was 7.8 m, and the maximum peak wave period recorded was 15.06 seconds. The annual scatter diagram for the Coquille River buoy generated from this data indicates that, based on 8,766 hours of observation, the majority of sea states for this area equate to less than 50 kW/m. The authors of the EPRI Report also generated monthly scatter diagrams to estimate average wave power flux over the course of an average year (Figure A-6).

FIGURE A-6
MONTHLY AVERAGE WAVE POWER FLUX (kW/m)
COQUILLE RIVER WAVE DATA BUOY

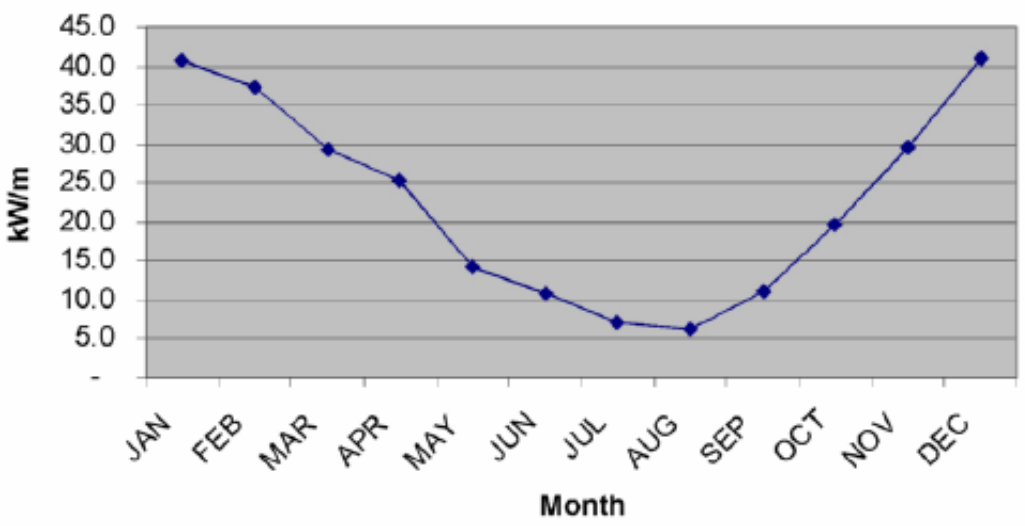

(adapted from EPRI 2004*a*)

18 CFR §4.61(c)(1)(viii) Sizes, capacities, and construction materials, as appropriate, of pipelines, ditches, flumes, canals, intake facilities, powerhouses, dams, transmission lines, and other appurtenances; and

Project facilities, in addition to the PowerBuoys and USP, include moorings, a subsea transmission cable, a shore station, a new underground terrestrial transmission cable to connect to the existing power system, and an underground transmission vault.

■ **PowerBuoy Moorings**

OPT, Inc. has designed the PowerBuoy mooring system based on proven engineering techniques that are commonly used in the oil and gas industry for mooring systems of floating platforms. Simple installation techniques allow for use of existing marine vessels and infrastructure. Further, OPT, Inc. has designed the PowerBuoys to be anchored by a conventional mooring system. The details of the design basis are as follows:

- Maintaining the PowerBuoy on station for normal operating loads and storm conditions, including potential damage scenarios involving loss of one mooring line;
- Adequate system compliance to limit loads during 100-year storms on the PowerBuoy, the power takeoff cable, and the mooring system foundations to acceptable levels;
- Permits PowerBuoy operation over the site tidal range;
- Maintains proper orientation of the PowerBuoy for maximum power generation;
- Eliminate contact of the mooring system components with the seabed other than the anchors; and
- Designed to Lloyds standards (*Rules and Regulations for the Classification of a Floating Offshore Installation at a Fixed Location*, May 1999).

Each PowerBuoy will be moored with three anchor lines arranged symmetrically around each PowerBuoy (120-degree separation) (Figure A-7). The anchors are expected to be steel-reinforced pre-cured concrete and have dimensions of approximately 32.8 feet in diameter by 24.6 feet in height (10 meters in diameter by 7.5 meters high). The anchors are expected to settle into the sediment and extend above the seabed approximately 18 feet (5.5 meters).

The PowerBuoy, subsurface floats (SSFs), and USP will be coated with an antifouling paint prior to installation in order to prevent marine life from colonizing these project components.

The mooring and anchoring system utilizes SSFs. It is anticipated that the SSFs will measure 10 feet in diameter and 20 feet in height. The SSFs will also be painted with anti-fouling paint. The SSFs will be located at a depth of approximately 50 feet; however, depths could be as little as 30 feet, depending on loads and conditions. The SSFs are positively buoyant to achieve tension within the moorings, eliminating any interaction of the mooring system with the seabed and maintaining the PowerBuoy within a specified watch circle. The mooring lines will extend from the PowerBuoy to the SSFs which are maintained at a depth of 30 to 50 feet by the tension of the mooring lines and tendons connected to the sea mounted anchors. The mooring lines will be a suitable commercially-available synthetic polyester material, having minimum breaking loads twice that of the design maximum and measuring 5 to 6 inches (128 to 152 mm) in diameter.

The design basis considers 100-year storm conditions, tidal variation, and extremes of wind, wave, and current, based upon site-specific metocean environment and geotechnical conditions in accordance with Lloyd's classification standards. The design is considered in both an intact state as well as damaged conditions. Failure analyses have been conducted to verify that the PowerBuoys will remain in place with only two of the three lines.

FIGURE A-7
POWERBUOY AND MOORING SCHEMATIC

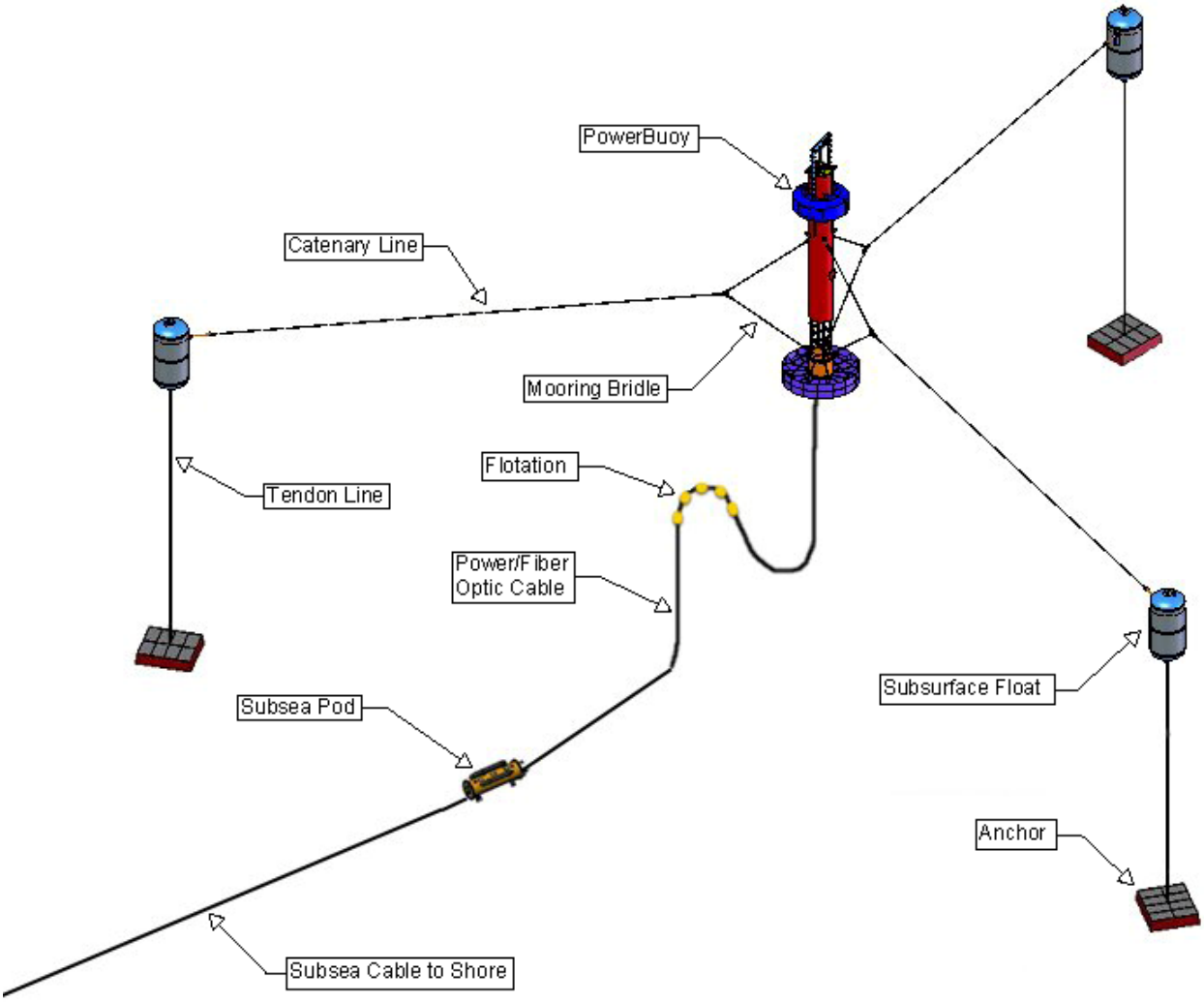

■ Subsea Transmission Cable

The generated power will be transmitted to shore for interconnection to the grid via an armored subsea transmission cable (13.8 kilovolt [kV], subject to change). The cable will be connected to the array and will follow an easterly course about 2.3 statute miles to the underwater outlet of an existing wastewater discharge pipe, which is located about 0.5 statute miles from shore. This portion of the cable, seaward of the discharge pipe outfall, will be buried in the seabed to a depth of about 3 to 6 feet (about 1 to 2 meters). OPT intends to use trenching or jet plowing to bury

the cable, but final determination will be determined based on the selection of the cable deployment contractor.

The effluent pipe is constructed of reinforced concrete measuring 36 inches in diameter and is buried in the sand. The subsea transmission cable will run within the effluent pipe to shore. No disturbance to the beach is expected during installation of this segment of the transmission cable. The use of the outfall pipe section transiting the Oregon Dunes National Recreational Area and the Siuslaw National Forest requires a U.S. Forest Service (USFS) Special Use Permit and an Oregon Parks and Recreation Department (ORPD) Ocean Shore Permit. This approach will not require any new easements or access roads for the project. OPT, the Port of Umpqua, Douglas Electric Cooperative, Oregon Department of State Lands, and the USFS are working on ensuring use of the pipe easement.

- **Terrestrial Transmission and Grid Interconnection**

The terrestrial portion of the transmission system includes underground components that terminate at a Douglas Electric Cooperative transmission line, and represents a total distance of approximately 3 miles, all of which will follow the existing effluent pipe easement (Figure IS-1).

Upon reaching the shore, the subsea transmission cable will continue within the effluent pipe below the beach and sand dunes to the demarcation point, which will be located at the existing turn-around at the end of Sparrow Park Road (immediately inland of the sand dunes) (Figure IS-1). The demarcation point will consist of a concrete vault in the ground, which is anticipated to be buried and not visible when construction is completed. At the demarcation point, the subsea transmission cable will exit the effluent pipe, transition to an underground cable in a buried vault, and reenter the effluent pipe.

The underground transmission cable will continue within the effluent pipe eastward for approximately 3 miles before reaching the shore station, located at the eastern boundary of the proposed project. This boundary is contiguous with westernmost boundary of Douglas Electric Cooperative's existing transmission lines. The shore station will measure approximately 100 to

200 square feet (about 10 to 20 square meters), which is comparable to the size of a typical residential garage. After leaving the shore station, the transmission cable will interconnect with the existing Douglas Electric Cooperative transmission line (Figure IS-1). The shore station is in close proximity to the interconnection point.

Reedsport OPT Wave Park, LLC will own and maintain the terrestrial segment of the transmission cable from the Demarcation Point to the Grid Interconnection. Douglas Electric Cooperative will own and maintain the terrestrial segment of the transmission cable from the Grid Interconnection at their existing power line. Douglas Electric Cooperative will own, operate, and maintain the existing transmission line to BPA's Gardiner Substation.

18 CFR §4.61(c)(1)(ix) The estimated cost of the project and 18 CFR §4.61(c)(1)(x) The estimated capital costs and estimated annual operation and maintenance expense of each proposed environmental measure.

This project will be the first time the PB150 PowerBuoy WECs will be deployed in a commercial demonstration anywhere in the U.S. The purpose of this commercial demonstration is to gather relevant operating, technical, and environmental data of an array configuration for OPT's PowerBuoy technology. This commercial demonstration is anticipated to address stakeholder's questions regarding the application of OPT's technology towards large scale commercial projects.

The estimated capital costs for this initial demonstration are not reflective of the capital costs for the mature technology in high volume production. OPT believes that the capital costs at that time will be competitive with traditional fossil fuel based generation. The estimated capital costs for this project are in excess of $50,000,000. Reedsport OPT Wave Park, LLC and its parent company, Ocean Power Technologies, Inc., are the only wave energy companies with the capability of obtaining financing for a project of this size. The project finance plan is anticipated to utilize a combination of third party equity and stakeholder funding, governmental cost share funding from the U.S. Department of Energy, tax credits from the U.S. Treasury Department and the state of Oregon, internal resources, and other resources available to OPT. It is not anticipated

that the installation of the multi-buoy project will proceed prior to project financing being in place.

Estimated cumulative PM&E measures for the first five years of the project are estimated at over $3,000,000. It is estimated that the first two years of the project will experience the highest expenses associated with the environmental studies. The estimates range from $1,000,000 to $1,400,000 for this early period in the project.

18 CFR §4.61(c)(2) State the purposes of project (for example, use of power output).

There are two primary purposes of the Reedsport Project, as proposed in this license application:

- Provide electrical power to Oregon consumers through a power purchase agreement with the Pacific Northwest Generating Cooperative (PNGC) Power, a Portland, Oregon-based electric power cooperative, and
- Collect data from operation of the 10 PowerBuoys to support future (commercial) expansion of the Reedsport Project and other wave energy projects in the U.S. and worldwide using OPT's PowerBuoy technology.

18 CFR §4.61(c)(3) An estimate of the cost to develop the license application; and

The estimated cost to develop the license application is in excess of $2,000,000.

18 CFR §4.61(c)(4) The on-peak and off-peak values of project power, and the basis for estimating the values, for projects which are proposed to operate in a mode other than run-of-river.

Reedsport OPT Wave Park, LLC plans to enter into a short-term power sale contract with PNGC Power for sale of all the power generated by the project. The price of this power will be the subject of negotiations between OPT and PNGC Power. It is anticipated that the price of power will be based on the current price of power which PNGC Power is paying from other sources.

OPT anticipates entering into another long-term power purchase contract with PNGC Power or a third party for electricity generated by the project after the initial period.

Wave energy can be forecasted up to three days in advance, unlike wind energy. For the purposes of this initial demonstration, OPT anticipates entering into a contract where a power purchase rate will be set at a fixed rate, regardless of whether the power is generated on peak or off peak.

18 CFR §4.61(c)(5) The estimated average annual increase or decrease in project generation, and the estimated average annual increase or decrease of the value of project power due to a change in project operations (i.e., minimum bypass flows, limiting reservoir fluctuations) for an application for a new license;

Not applicable. The project represents an original license, and the proposed operations therefore do not represent a change in operations.

18 CFR §4.61(c)(6) The remaining undepreciated net investment, or book value of the project;

The book value of the project is in excess of $50,000,000 as per the response to a preceding question.

18 CFR §4.61(c)(7) The annual operation and maintenance expenses, including insurance, and administrative and general costs;

Annual O&M expenses for this commercial demonstration are anticipated to be higher than for the target O&M expenses for the mature technology in high production volumes. As this project represents a “first of a kind” commercial demonstration of a PowerBuoy array, the objective of the project is for the OPT to ascertain performance of the PB150 PowerBuoy equipment compared with design and engineering specifications. OPT anticipates that operating expenses will be approximately similar to an offshore wind renewable energy project for administrative, operating, and technical expenses. Expenses for maintenance personnel are anticipated to be comparable to similar work in allied industries. OPT asserts proprietary claims as to the

projected maintenance costs for this project, given this first of a kind commercial demonstration project.

OPT anticipates that the cost of insurance and safety requirements are likely to be incorporated by the state of Oregon as conditions of the permits and licenses the OPT must receive to build and operate the project. The estimated cost of environmental monitoring and enhancement measures over the anticipated five-year environmental study period was provided in a preceding question.

18 CFR §4.61(c)(8) A detailed single-line electrical diagram;

A single-line diagram showing the transfer of electricity from the project to the transmission grid is shown on Figure A-8.

PNGC Power, a Portland, Oregon-based electric power cooperative serving 15 distribution cooperatives with service territory in seven western states, is supporting OPT in the permitting process and power transmission for the project. PNGC Power will work cooperatively with OPT to pursue a power purchase agreement, under which PNGC Power would purchase the electrical energy output of the 1.5 MW wave power park from OPT. Further, PNGC Power will provide its expertise regarding grid interconnection and its experience in meeting the standards of the Bonneville Power Administration, which operates much of the region's power system.

18 CFR §4.61(c)(9) A statement of measures taken or planned to ensure safe management, operation, and maintenance of the project.

OPT currently plans to carry out the operations and maintenance (O&M) activities outlined in Table A-2 below. This O&M plan will help ensure safe management, operation, and maintenance of the project.

FIGURE A-8
SINGLE-LINE DIAGRAM

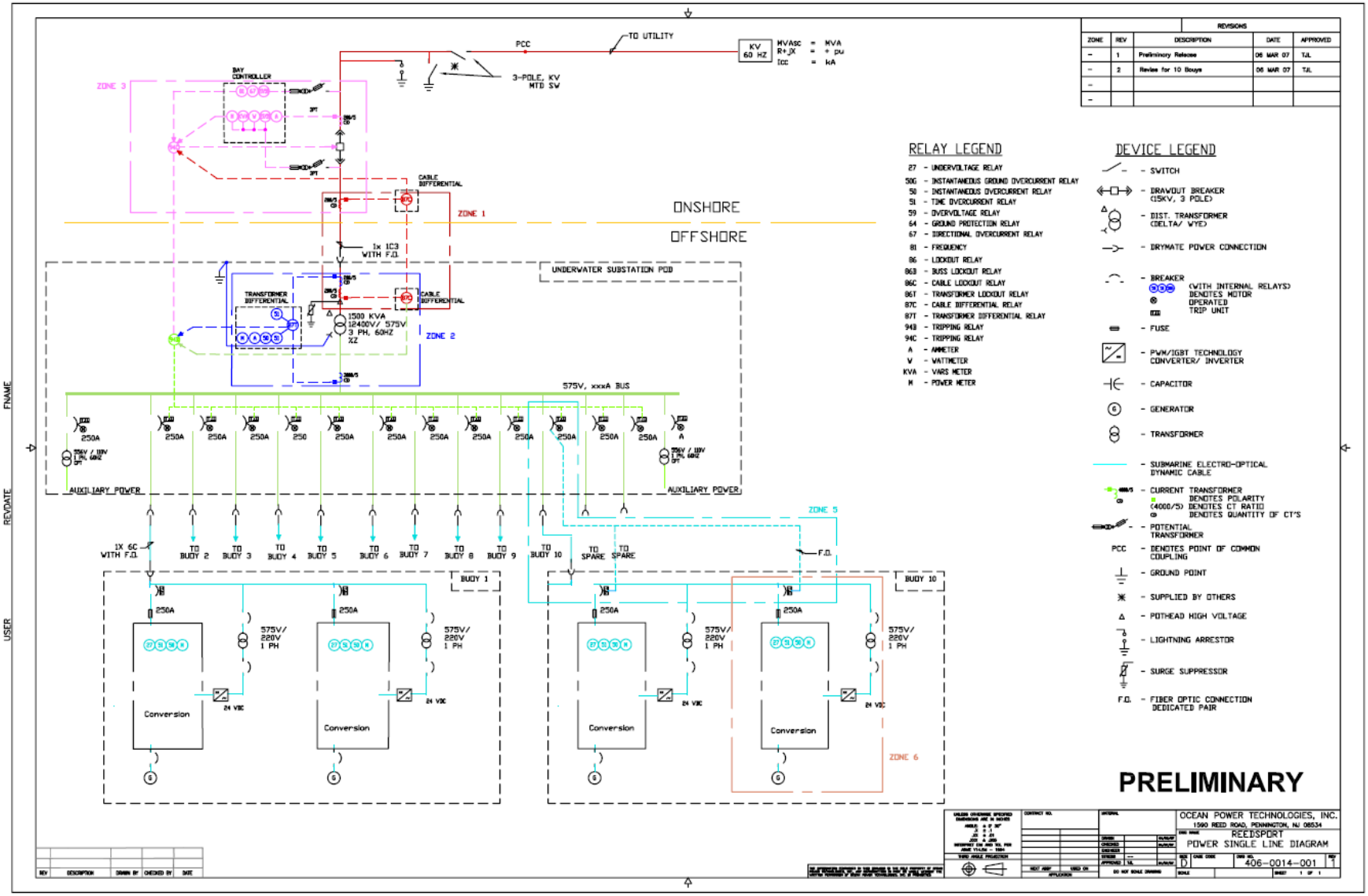

TABLE A-2
ANTICIPATED O&M ACTIVITIES FOR THE REEDSPORT PROJECT

Item	Description	Frequency
1	Continuous on-shore monitoring and operation	Throughout the duration of the operation of the Wave Park
2	Preventative maintenance/site inspection	Monthly
3	Equipment inspections	Annually unless otherwise specified in the Settlement Agreement Study Plans.
4	Planned maintenance - retrieval, refurbishment, redeployment	The first PowerBuoy may be retrieved after two years. A five-year major service period is anticipated for the other PowerBuoys deployed at the site.
5	Unplanned maintenance - retrieval, refurbishment, redeployment	As required, weather and other safety conditions being considered.
6	Supporting documentation	Reports produced after monthly inspection, equipment inspections, and maintenance records
7	Management and storage of spare parts	As required for 4 and 5 above

The elements of the O&M plan are further discussed below and an O&M plan is included in Appendix B.

- **Monitoring and Operation of the Facility** - A Site Supervisor will be available at site on short notice and monitoring operation of the system on a continuous basis via the system control and data acquisition (SCADA) system. The Supervisor will be knowledgeable and have the training necessary to perform all the routine operational and emergency procedures. On those occasions, when the Supervisor cannot be available locally, a substitute will be provided. Labor will be required for supervision, maintenance assessment, component repair, on-site inspection, and monitoring. It is expected that there will be a full-time site supervisor/plant manager and one assistant, with a part-time technician during the summer planned maintenance period. The planned maintenance would typically be carried out over the summer months to ensure maintenance occurs during periods of optimal access conditions and minimizes impacts to power production. During the initial operational period for the equipment, it is anticipated that servicing of major components *in situ* would not be performed. The intent is that the device would be uncoupled and taken to shore for significant maintenance during this initial period. Thereafter, OPT anticipates that most major serving procedures may be done on station.

- **Preventative Maintenance/Site Inspection** - Monthly inspection of all aspects of the PowerBuoy array visible from the sea surface to check connections, wear conditions, and any other visual anomalies.
- **Underwater Inspection** - Appropriate inspection techniques will be used to view underwater components of the project, including looking for any accumulation of derelict fishing gear on the array. This will be performed annually unless a shorter inspection frequency is specified in the study plans.
- **Planned Maintenance** - The first retrieval, refurbishment and replacement of individual PowerBuoy is anticipated to be carried out after two years of operation, and every five years thereafter. This initial servicing for the first PowerBuoy will be brought to shore to remove biofouling, repaint the PowerBuoy, and inspect and replace any worn components such as lid seals, hydraulic seals, bearing pads, etc. When a PowerBuoy is removed from its mooring system for maintenance, the three mooring lines are then connected to each other centrally and supported with an additional SSF which maintains tension on the mooring system. There is no slack introduced into the mooring system.
- **Unplanned Maintenance** - any unscheduled maintenance will be completed as necessary.
- **Management and Storage of Spare Parts** - Spare parts will be provided as required for the planned maintenance. Other spare parts will be available within OPT or from suppliers for components which may require repair or replacement.

Although the PowerBuoy mooring system is designed to withstand severe weather, OPT has nevertheless developed, in coordination with the USCG, OPRD, USFS, National Marine Fisheries Service (NMFS), and U.S. Fish and Wildlife Service (USFWS), an emergency response and recovery plan in the unlikely event of a PowerBuoy drifting or become detached from its mooring lines. The plan is included as Appendix I of the APEA (Volume II). OPT will be responsible for the costs associated with emergency response and recovery. Each PowerBuoy will be equipped with a beacon and GPS unit to allow for monitoring of its location.

A Spill Prevention Control and Countermeasure Plan (SPCC) has been developed in accordance with the U.S. Environmental Protection Agency's (EPA) regulations at 40 C.F.R. 112 and is included in Appendix F of the APEA (Volume II). This plan will ensure that measures and

procedures are in place to respond in the unlikely event of a release of hydraulic fluid into the navigable waters of the U.S. The plan is subject to periodic review and update in accordance with these regulations. A current copy of the plan will be maintained onsite and provided to the USCG and other agencies as per the applicable regulations.

The PowerBuoy transmission system is designed to prevent the risk of fault current entering the ocean in the event of damage to the transmission cable or an internal malfunction in the PowerBuoy or USP. Fault current protection from electrical leakage has been designed into the PowerBuoy and transmission system. In the event of a fault, a computer-controlled fault detection and circuit interruption system would cease exporting electricity from the PowerBuoy or protective relays in the USP would cause the utility grade breakers to open and stop the flow of electricity. Under these circumstances, the supervisory and fault protection relays are designed to minimize fault current, power down the buoy, and electrically isolate the failed component. Additionally, the PowerBuoy undersea cable would be armored to make it resistant to damage from external sources.

To provide for navigational safety, OPT plans to receive a designation of the 10-PowerBuoy array area by USCG and the Oregon Fish and Wildlife Commission as a Restricted Navigation Area and a No Fishing Area. OPT proposes to develop a Marine Use/Public Information Plan in consultation with the USCG, Oregon Department of Fish and Wildlife (ODFW), Oregon Department of Land Conservation and Development (ODLCD), and other interested stakeholders and agencies to implement and disseminate information about the benefits of wave energy to the public, the designation of the project area as a restricted area, as well as address aspects of the project design aimed at vessel safety.

USCG regulations, including NVICO2-07, require that the project have adequate lighting as aids to navigation to minimize the potential of collisions. OPT will light the eight perimeter PowerBuoys in the array and the inside two PowerBuoys will also have a flashing light of less intensity, as requested by the USCG. The final lighting flash pattern will be developed in consultation with stakeholders and the light manufacturer. The final flash pattern will aid in

depth perception, visibility in a variety of seastates, and the ability to distinguish individual PowerBuoys at the periphery and within the interior of the array.

With respect to concerns regarding attraction of seabirds to the lit PowerBuoys, the USFWS recommends that OPT use a flash timing of equal to or greater than 4 seconds for each individual light, OPT will file its Private Aids to Navigation (PATON) Application with the USCG to adhere to this requirement. OPT has selected the Carmanah (www.solarmarinelights.com) Model 702-GPS for the array. This navigation aid is a fully-integrated, solar LED 3-nautical-mile (3.4 miles) marine light with Global Positioning Satellite (GPS) synchronization. One of the benefits to this particular model is that the flash signal can be remotely set.

Exhibit E

Environmental Report

18 CFR §4.61(d) Exhibit E, Environmental Report

OPT has prepared an APEA, which is included in Volume II.

Exhibit F

General Design Drawings and Supporting Design Report

18 CFR §4.41(g) Exhibit F consists of general design drawings of the principal project works described under paragraph (b) of this section (Exhibit A) and supporting information used as the basis of design. If the Exhibit F submitted with the application is preliminary in nature, applicant must so state in the application. The drawings must conform to the specifications of §4.39.

18 CFR §4.41(g)(1) The drawings must show all major project structures in sufficient detail to provide a full understanding of the project, including:

18 CFR §4.41(g)(1)(i) Plans (overhead view);

18 CFR §4.41(g)(1)(ii) Elevations (front view);

18 CFR §4.41(g)(1)(iii) Profiles (side view); and

18 CFR §4.41(g)(1)(iv) Sections.

18 CFR §4.41(g)(2) The applicant may submit preliminary design drawings with the application. The final Exhibit F may be submitted during or after the licensing process and must show the precise plans and specifications for proposed structures. If the project is licensed on the basis of preliminary designs, the applicant must submit a final Exhibit F for Commission approval prior to commencement of any construction of the project.

The General Design Drawings show overall plan views, elevations, and sections of the principal project works in sufficient detail to provide a full understanding of the proposed Reedsport Project. OPT proposes to file final as-built drawings following installation of the project.

Table F-1 lists the General Design Drawings.

TABLE F-1
GENERAL DESIGN DRAWINGS

Drawing Number	Title
F-1	Plans and Sections, Reedsport Project
F-2	Plans and Sections, Reedsport Project

18 CFR §4.41(g)(3) Supporting Design Report. The applicant must furnish, at a minimum, the following supporting information to demonstrate that existing and proposed structures are safe and adequate to fulfill their stated functions and must submit such information in a separate report at the time the application is filed. The report must include:

18 CFR §4.41(g)(3)(i) An assessment of the suitability of the site and the reservoir rim stability based on geological and subsurface investigations, including investigations of soils and rock borings and tests for the evaluation of all foundations and construction materials sufficient to determine the location and type of dam structure suitable for the site;

18 CFR §4.41(g)(3)(ii) Copies of boring logs, geology reports and laboratory test reports;

18 CFR §4.41(g)(3)(iii) An identification of all borrow areas and quarry sites and an estimate of required quantities of suitable construction material;

18 CFR §4.41(g)(3)(iv) Stability and stress analyses for all major structures and critical abutment slopes under all probable loading conditions, including seismic and hydrostatic forces induced by water loads up to the Probable Maximum Flood as appropriate; and

18 CFR §4.41(g)(3)(v) The bases for determination of seismic loading and the Spillway Design Flood in sufficient detail to permit independent staff evaluation.

This regulation, which applies to conventional hydropower projects with water-retaining structures, requires a significant amount of interpretation for the Reedsport Project—the primary components of which are 10 floating PowerBuoys, USP, a subsea transmission cable, and a terrestrial underground transmission cable connecting the PowerBuoys to an existing Douglas

Electric Cooperative transmission power line. The information required to ensure that the project is properly designed and securely anchored is included within specific sections of the License Application and APEA as well as separate studies. The anchoring system being considered for the project is primarily based on existing technology designed, tested, and proven for other marine applications and does not involve the same level of site-specific project design that is typical of traditional hydropower projects. A description of the project design criteria is included in Exhibit A, and these additional supporting documents are included as appendices to the APEA:

- Marine Geophysical Survey Report (APEA Appendix D)
- Operations and Maintenance Plan (APEA Appendix B)
- Emergency Response and Recovery Plan (APEA Appendix I)

OPT will provide design specifications to FERC for review and approval before beginning construction.

18 CFR §4.41(g)(4) The applicant must submit two copies of the supporting design report described in paragraph (g)(3) of this section at the time preliminary and final design drawings are submitted to the Commission for review. If the report contains preliminary drawings, it must be designated a "Preliminary Supporting Design Report."

As indicated above, OPT does not believe that a stand-alone Exhibit F Supporting Design Report, which is typically associated with extensive structures design and safety issues, is applicable for the proposed hydrokinetic project.

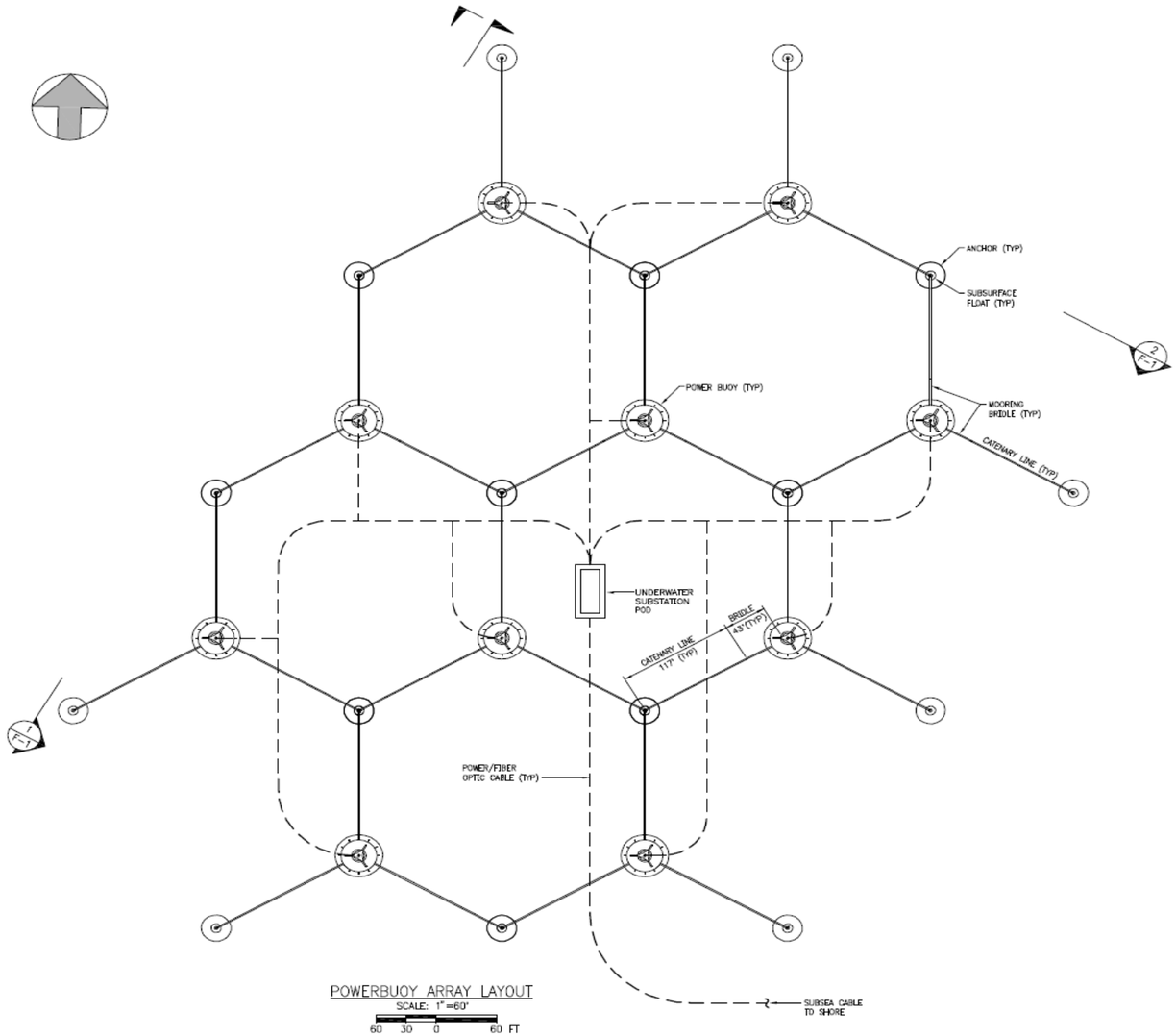

POWERBUOY ARRAY LAYOUT
SCALE: 1"=60'

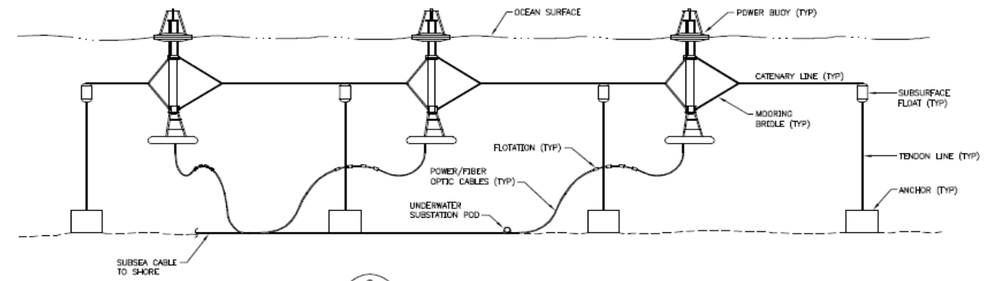

2 / F-1 SECTION – POWERBUOY ARRAY
SCALE: 1"=60'

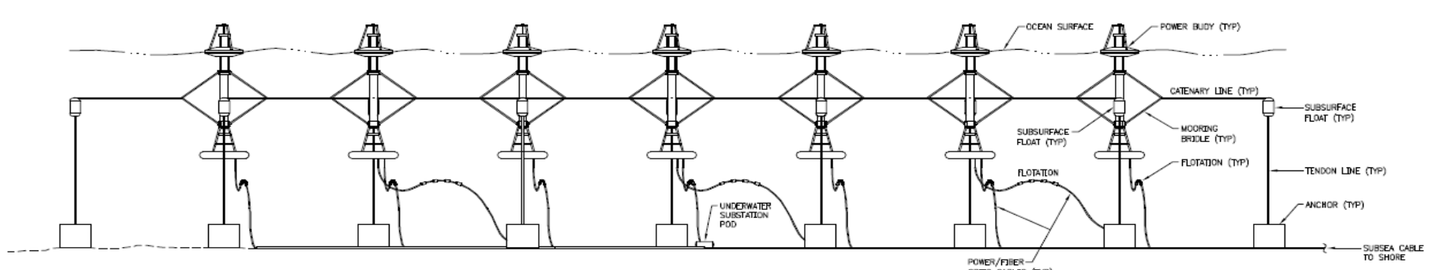

1 / F-1 SECTION – POWERBUOY ARRAY
SCALE: 1"=60'

NOTE:
DIMENSIONS ARE SUBJECT TO CHANGE WITH DESIGN LOADS (VARY DEPENDING ON DEPTH AND POSITION WITHIN ARRAY) AND FINAL PROJECT DESIGN.

EXHIBIT F–1		SHEET 1 OF 2
PLANS AND SECTIONS		
REEDSPORT OPT WAVE PARK REEDSPORT OPT WAVE PARK, LLC		FERC No. 12713
DATE: JANUARY 2010	SCALE: AS NOTED	APPROVED:

Proprietary Preliminary Design Drawing

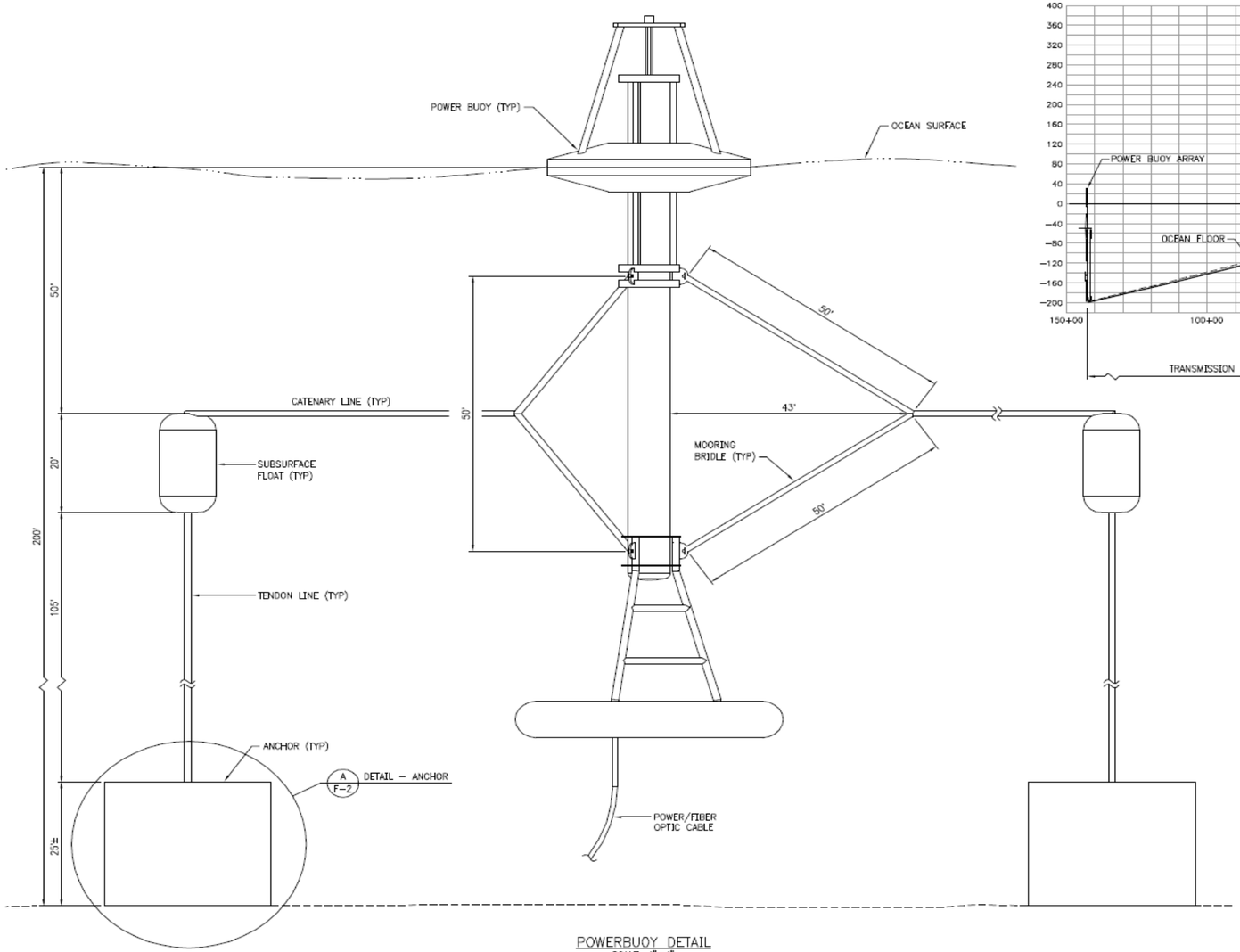

POWERBUOY DETAIL
SCALE: 1"=1'
10 5 0 10 FT

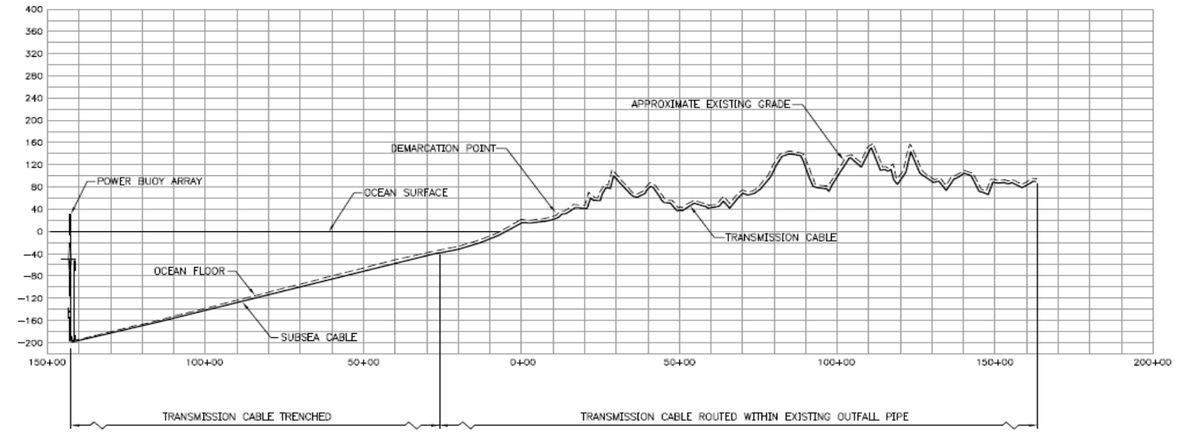

TRANSMISSION LINE PROFILE
HORIZ. 2000 1000 0 2000 FT
VERT. 100 50 0 100 FT

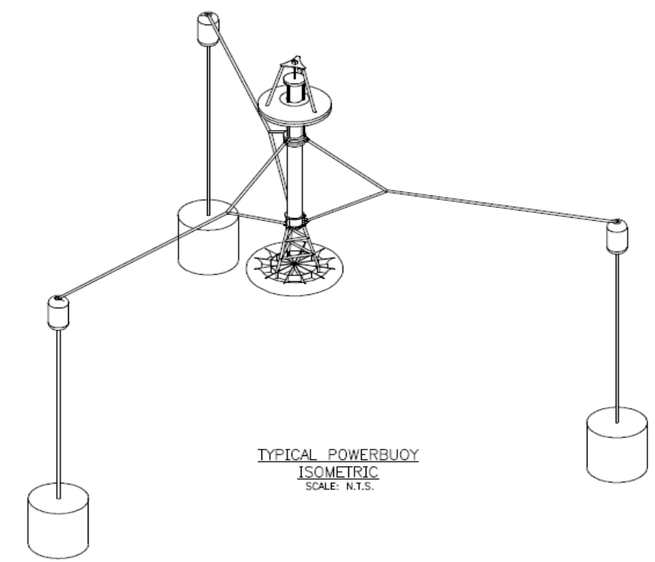

TYPICAL POWERBUOY ISOMETRIC
SCALE: N.T.S.

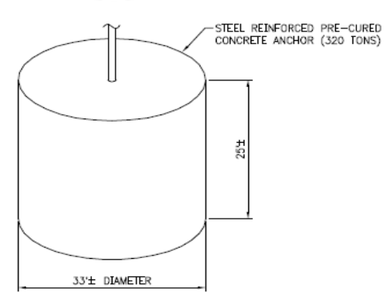

A F-2 DETAIL – ANCHOR
SCALE: 1"=1'±

NOTE:
DIMENSIONS ARE SUBJECT TO CHANGE WITH DESIGN LOADS (VARY DEPENDING ON DEPTH AND POSITION WITHIN ARRAY) AND FINAL PROJECT DESIGN.

EXHIBIT F–2		SHEET 2 OF 2
PLANS AND SECTIONS		
REEDSPORT OPT WAVE PARK REEDSPORT OPT WAVE PARK, LLC		FERC No. 12713
DATE: JANUARY 2010	SCALE: AS NOTED	APPROVED:

Proprietary Preliminary Design Drawing

Exhibit G

Project Map

18 CFR §4.41(h) Exhibit G is a map of the project that must conform to the specifications of §4.39. In addition, to the other components of Exhibit G, the Applicant must provide the project boundary data in a geo-referenced electronic format - such as ArcView shape files, GeoMedia files, MapInfo files, or any similar format. The electronic boundary data must be positionally accurate to ± 40 feet, in order to comply with the National Map Accuracy Standards for maps at a 1:24,000 scale (the scale of USGS quadrangle maps). The electronic exhibit G data must include a text file describing the map projection used (i.e., UTM, State Plane, Decimal Degrees, etc.), the map datum (i.e., feet, meters, miles, etc.). Three sets of the maps must be submitted on compact disk or other appropriate electronic media. If more than one sheet is used for the paper maps, the sheets must be numbered consecutively, and each sheet must bear a small insert sketch showing the entire project and indicate that portion of the project depicted on that sheet. Each sheet must contain a minimum of three known reference points. The latitude and longitude coordinates, or state plane coordinates, of each reference point must be shown. If at any time after the application is filed there is any change in the project boundary, the applicant must submit, within 90 days following the completion of project construction, a final exhibit G showing the extent of such changes. The map must show:

18 CFR §4.41(h)(1) Location of the project and principal features. The map must show the location of the project as a whole with reference to the affected stream or other body of water and, if possible, to a nearby town or any other permanent monuments or objects, such as roads, transmission lines or other structures, that can be noted on the map and recognized in the field. The map must also show the relative locations and physical interrelationships of the principal project works and other features described under paragraph (b) of this section (Exhibit A).

18 CFR §4.41(h)(2) Project boundary. The map must show a project boundary enclosing all project works and other features described under paragraph (b) of this section (Exhibit A) that are to be licensed. If accurate survey information is not available at the time the application is

filed, the applicant must so state, and a tentative boundary may be submitted. The boundary must enclose only those lands necessary for operation and maintenance of the project and for other project purposes, such as recreation, shoreline control, or protection of environmental resources (see paragraph (f) of this section (Exhibit E)). Existing residential, commercial, or other structures may be included within the boundary only to the extent that underlying lands are needed for project purposes (e.g., for flowage, public recreation, shoreline control, or protection of environmental resources). If the boundary is on land covered by a public survey, ties must be shown on the map at sufficient points to permit accurate platting of the position of the boundary relative to the lines of the public land survey. If the lands are not covered by a public land survey, the best available legal description of the position of the boundary must be provided, including distances and directions from fixed monuments or physical features. The boundary must be described as follows:

(i) Impoundments.

(A) The boundary around a project impoundment must be described by one of the following:

(1) Contour lines, including the contour elevation (preferred method);

(2) Specified courses and distances (metes and bounds);

(3) If the project lands are covered by a public land survey, lines upon or parallel to the lines of the survey; or

(4) Any combination of the above methods.

(B) The boundary must be located no more than 200 feet (horizontal measurement) from the exterior margin of the reservoir, defined by the normal maximum surface elevation, except where deviations may be necessary in describing the boundary according to the above methods or where additional lands are necessary for project purposes, such as public recreation, shoreline control, or protection of environmental resources.

(ii) Continuous features. The boundary around linear ("continuous") project features such as access roads, transmission lines, and conduits may be described by specified distances from center lines or offset lines of survey. The width of such

corridors must not exceed 200 feet unless good cause is shown for a greater width. Several sections of a continuous feature may be shown on a single sheet with information showing the sequence of contiguous sections.

(iii) Noncontinuous features.

(A) The boundary around noncontinuous project works such as dams, spillways, and powerhouses must be described by one of the following:

(1) Contour lines;

(2) Specified courses and distances;

(3) If the project lands are covered by a public land survey, lines upon or parallel to the lines of the survey; or

(4) Any combination of the above methods.

(B) The boundary must enclose only those lands that are necessary for safe and efficient operation and maintenance of the project or for other specified project purposes, such as public recreation or protection of environmental resources.

18 CFR §4.41(h)(3) Federal lands. Any public lands and reservations of the United States ("Federal lands") [see 16 U.S.C. 795(1) and (2)] that are within the project boundary, such as lands administered by the U.S. Forest Service, Bureau of Land Management, or National Park Service, or Indian tribal lands, and the boundaries of those Federal lands, must be identified as such on the map by:

(i) Legal subdivisions of a public land survey of the affected area (a protraction of identified township and section lines is sufficient for this purpose); and

(ii) The Federal agency, identified by symbol or legend, that maintains or manages each identified subdivision of the public land survey within the project boundary; or

(iii) In the absence of a public land survey, the location of the Federal lands according to the distances and directions from fixed monuments or physical features. When a Federal survey monument or a Federal bench mark will be destroyed or rendered unusable by the construction of project works, at least two permanent, marked witness monuments or bench marks must be established at accessible points. The maps show the location (and elevation, for bench marks) of the survey monument

or bench mark which will be destroyed or rendered unusable, as well as of the witness monuments or bench marks. Connecting courses and distances from the witness monuments or bench marks to the original must also be shown.

(iv) The project location must include the most current information pertaining to affected Federal lands as described under §4.81(b)(5).

18 CFR §4.41(h)(4) Non-Federal lands. For those lands within the project boundary not identified under paragraph (h)(3) of this section, the map must identify by legal subdivision:

(i) Lands owned in fee by the applicant and lands that the applicant plans to acquire in fee; and

(ii) Lands over which the applicant has acquired or plans to acquire rights to occupancy and use other than fee title, including rights acquired or to be acquired by easement or lease.

This exhibit contains a preliminary map of the study area under consideration for the Reedsport Project. The transmission cable is currently proposed to be constructed as follows:

- trenched to a minimum depth of 3 to 6 feet along the ocean floor between the PowerBuoy array and the existing outfall pipe located about a half mile from shore;
- run through the outfall pipe to a point inland of the sand dunes;
- underground within an existing effluent pipe easement; and
- continuing underground approximately 3 miles within the existing effluent pipe easement to a Douglas Electric Cooperative power line.

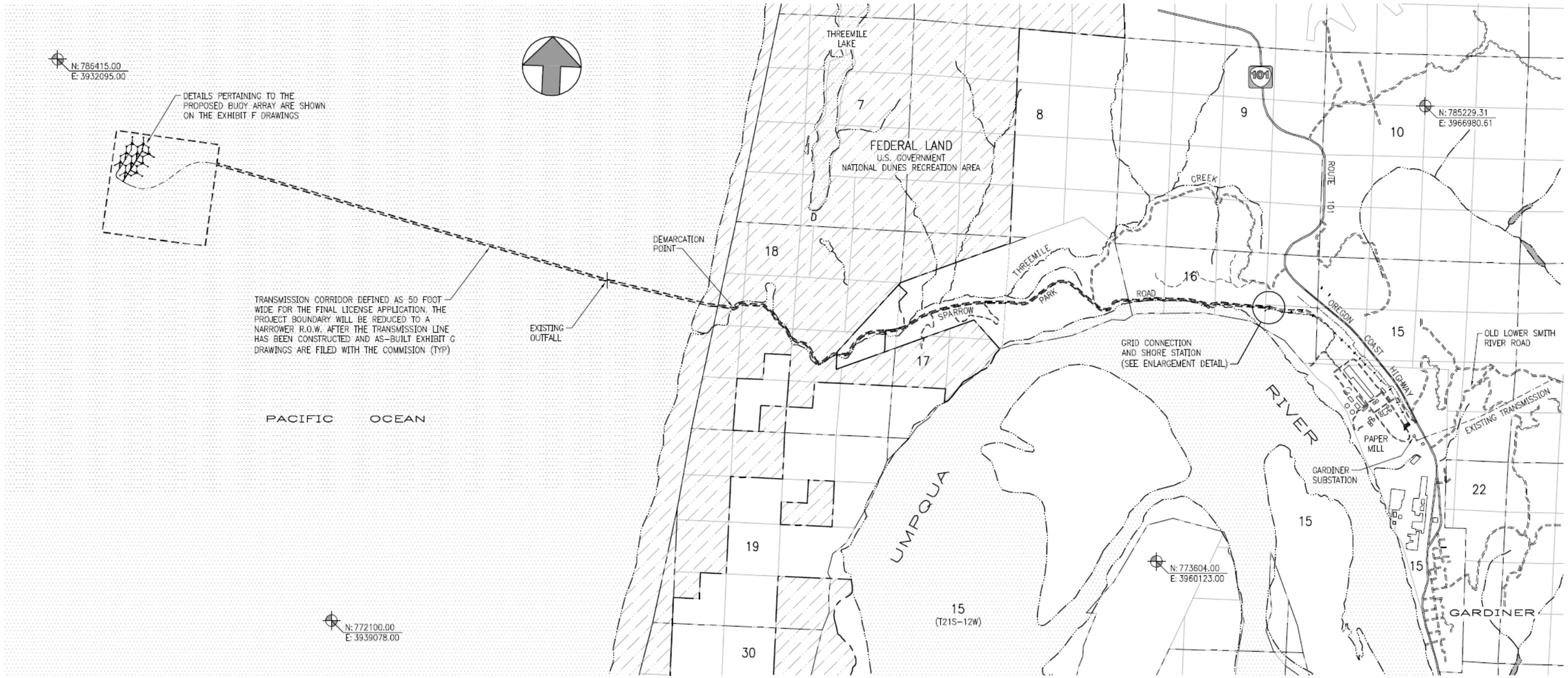

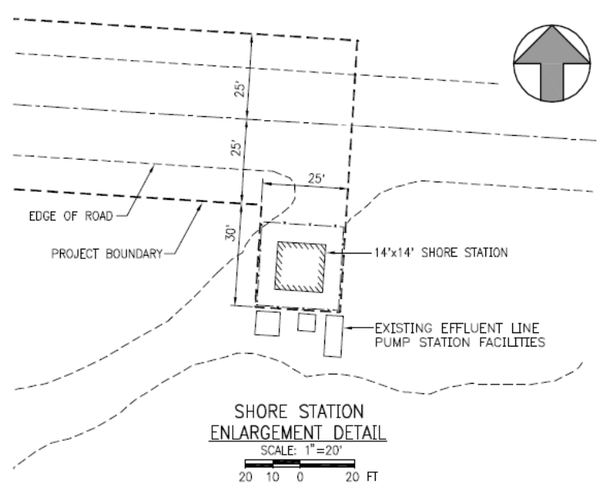

LEGEND:

- PROJECT BOUNDARY
- PROPERTY LINE
- TOWNSHIP LINE
- TOWNSHIP SECTION LINE
- TOWNSHIP SUBDIVISION LINE
- SHORELINE/STREAM
- TRANSMISSION LINE
- FENCE
- PRIMARY ROADS
- SECONDARY ROADS
- NATIONAL DUNES REC. AREA

1"=1200'±
1200 600 0 1200 FT

NOTE:
ALL LAND NOT IDENTIFIED AS FEDERAL LAND IS EASMENT LAND.

GEOREFERENCE SOURCE DATA

- PLSS TOWNSHIP SHAPEFILE DATA PER NATIONAL INTEGRATED LAND SYSTEMS, BUREAU OF LAND MANAGEMENT AND USDA FOREST SERVICE SURVEY GEOGRAPHIC COORDINATE DATA BASE (GCDB) (ORIGINAL COORDINATE SYSTEM: GCS_NAD83_NADCON)
- STUNTZNER ENGINEERING & FORESTRY, I.P.C.O. PIPELINE ROAD SURVEY DRAWING DATA, OCT. 23, 2008.
- DOUGLAS COUNTY PLANNING DEPT. AERIAL PHOTOGRAPHY, 2005, (ORIGINAL COORDINATE SYSTEM: NAD83, OREGON SOUTH ZONE, FEET)

REFERENCE COORDINATE METADATA

PROJECTION – OREGON STATE PLANE
DATUM – NAD83
ZONE – SOUTH
UNITS – U.S. SURVEY FEET

STATE OF MAINE
STEPHEN W. EVERETT
2161
PROFESSIONAL LAND SURVEYOR

SURVEYORS STATEMENT

I HEREBY CERTIFY TO THE FEDERAL ENERGY REGULATORY COMMISSION (FERC) THAT THIS PLAN MEETS THE CONDITIONS SET FOURTH BY FERC FOR ITS EXPRESSED PURPOSE. THE PURPOSE OF THIS MAP IS TO PROVIDE A GEOREFERENCED VISUAL DEPICTION OF THE LOCATION OF PROJECT FEATURES AND BOUNDARIES BASED ON THE BEST AVAILABLE HISTORICAL DRAWINGS AND DIGITAL REFERENCE SOURCES INCORPORATED INTO THE GEOGRAPHIC INFORMATION SYSTEM (GIS). LOCATIONS HAVE NOT BEEN VERIFIED BY PHYSICAL FIELD SURVEYS AND THIS DRAWING SHOULD NOT BE USED FOR PURPOSES OF DEVELOPING PROPERTY BOUNDARY DESCRIPTIONS.

EXHIBIT G–1		SHEET 1 OF 1
PROJECT BOUNDARY MAP		
REEDSPORT OPT WAVE PARK REEDSPORT OPT WAVE PARK, LLC		FERC No. 12713
DATE: JANUARY 2010	SCALE: AS NOTED	APPROVED:

Form FERC-587
OMB No. 1902-0145
(Expires 07/30/2012)

LAND DESCRIPTION

Public Land States
(Rectangular Survey System Lands)

1. STATE Oregon 2. FERC PROJECT NO. P-12713

3. TOWNSHIP 21 South RANGE 12 West MERIDIAN Willamette

4. Check one:

_____License
_x_Preliminary Permit

Check one:

_____Pending
_x_Issued

If preliminary permit is issued, give expiration date: February 1, 2010

5. EXHIBIT SHEET NUMBERS OR LETTERS

Section 6	5	4	3	2	1
7	8	9	10	11	12
18 A	17 A	16 A	15 A	14	13
19	20	21	22	23	24
30	29	28	27	26	25
31	32	33	34	35	36

6. contact's name George Wolff

telephone no. (609-730-0400)

Date submitted February 1, 2010

This information is necessary for the Federal Energy Regulatory Commission to discharge its responsibilities under Section 24 of the Federal Power Act.